SIAM J. CONTROL OPTIM.
Vol. 47, No. 4, pp. 1643–1666
© 2008 Society for Industrial and Applied Mathematics

NONLINEAR OPTIMAL CONTROL VIA OCCUPATION MEASURES AND LMI-RELAXATIONS*

JEAN B. LASSERRE†, DIDIER HENRION‡, CHRISTOPHE PRIEUR§, AND EMMANUEL TRÉLAT¶

Abstract. We consider the class of nonlinear optimal control problems (OCPs) with polynomial data, i.e., the differential equation, state and control constraints, and cost are all described by polynomials, and more generally for OCPs with smooth data. In addition, state constraints as well as state and/or action constraints are allowed. We provide a simple hierarchy of LMI- (linear matrix inequality)-relaxations whose optimal values form a nondecreasing sequence of lower bounds on the optimal value. Under some convexity assumptions, the sequence converges to the optimal value of the OCP. Preliminary results show that good approximations are obtained with few moments.

Key words. nonlinear control, optimal control, semidefinite programming, measures, moments

AMS subject classifications. 90C22, 93C10, 28A99

DOI. 10.1137/070685051

1. Introduction.

Solving a general nonlinear optimal control problem (OCP) is a difficult challenge, despite the powerful theoretical tools available, e.g., the maximum principle and Hamilton–Jacobi–Bellman (HJB) optimality equation. The problem is even more difficult in the presence of state and/or control constraints. State constraints are particularly difficult to handle, and the interested reader is referred to Capuzzo-Dolcetta and Lions [8] and Soner [41] for a detailed account of HJB theory in the case of state constraints. There exist many numerical methods to compute the solution of a given OCP [37, 43]; for instance, *multiple shooting* techniques which solve two-point boundary value problems as described, e.g., in [42, 36], or *direct methods*, as, e.g., in [46, 13, 15], which use, among other things, descent or gradient-like algorithms. To deal with OCPs with state constraints, some adapted versions of the maximum principle have been developed (see [27, 34], and see [16] for a survey of this theory) but are very hard to implement in general.

On the other hand, the OCP can be written as an infinite-dimensional linear program (LP) over two spaces of measures. This is called the *weak* formulation of the OCP in Vinter [45] (stated in the more general context of differential inclusions). The two unknown measures are the state-action *occupation measure* (o.m.) *up to* the final time T, and the state o.m. *at* time T. The optimal value of the resulting LP always provides a lower bound on the optimal value of the OCP, and under some convexity

*Received by the editors March 12, 2007; accepted for publication (in revised form) January 28, 2008; published electronically June 11, 2008. This work was partially supported by the French National Research Agency (ANR) under research project MOGA NT05-3-41612.
http://www.siam.org/journals/sicon/47-4/68505.html
†LAAS-CNRS and Institute of Mathematics, University of Toulouse, Toulouse, France (lasserre@laas.fr).
‡LAAS-CNRS, University of Toulouse, Toulouse, France, and Faculty of Electrical Engineering, Czech Technical University, Prague, Czech Republic (henrion@laas.fr). The research of this author was partly supported by project 102/06/0652 of the Grant Agency of the Czech Republic and research program MSM6840770038 of the Ministry of Education of the Czech Republic.
§LAAS-CNRS, University of Toulouse, Toulouse, France (cprieur@laas.fr).
¶Université d'Orléans, Laboratoire MAPMO CNRS, UMR 6628 Fédération Denis Poisson, FR 2964 Bâtiment de Mathématiques BP 6759, 45067 Orléans cedex 2, France (emmanuel.trelat@univ-orleans.fr).

Copyright © by SIAM. Unauthorized reproduction of this article is prohibited.

assumptions, both values coincide; see Vinter [45] and Hernandez-Hernandez et al. [20] as well. See Gaitsgory and Rossomakhine [14] for a more recent related work where, in addition, a numerical scheme is also defined for approximating an optimal control.

The dual of the original infinite-dimensional LP has an interpretation in terms of "subsolutions" of related HJB-like optimality conditions, as for the unconstrained case. The only difference with the unconstrained case is the underlying function space involved, which directly incorporates the state constraints. Namely, the functions are only defined on the state constraint set.

An interesting feature of this LP approach with o.m.'s is that state constraints, as well as state and/or action constraints, are all easy to handle; indeed they simply translate into constraints on the supports of the unknown o.m.'s. It thus provides an alternative to the use of maximum principles with state constraints. Although this LP approach is valid for any OCP, solving the corresponding (infinite-dimensional) LP is difficult in general; however, general LP approximation schemes based on grids have been proposed in, e.g., Hernández-Lerma and Lasserre [22].

This LP approach has also been used in the context of discrete-time Markov control processes, and is dual to Bellman's optimality principle. For more details the interested reader is referred to the convex analytic approach described in Borkar [6], Hernández-Lerma and Lasserre [21, 23, 24], and the many references therein. For some continuous-time stochastic control problems (e.g., modeled by diffusions) and optimal stopping problems, the LP approach has also been used with success to prove existence of stationary optimal policies; see, for instance, Bhatt and Borkar [4], Cho and Stockbridge [9], Helmes and Stockbridge [18], Helmes, Röhl, and Stockbridge [17], Kurtz and Stockbridge [29], and also Fleming and Vermes [12]. In some of these works, the moment approach is also used to approximate the resulting infinite-dimensional LP.

Contribution. In this paper, we consider the particular class of nonlinear OCPs with state and/or control constraints, for which all data describing the problem (dynamics and state and control constraints) are *polynomials*. The approach also extends to the case of problems with *smooth* data and compact sets, because polynomials are dense in the space of functions considered; this point of view is detailed in section 4. In this restricted polynomial framework, the LP approach has interesting additional features that can be exploited for effective numerical computation. Indeed, for the class of OCPs considered, the following features make this LP approach attractive:

- Only the *moments* of the o.m.'s appear in the LP formulation, so that we already end up with countably many variables—a significant progress.
- Constraints on the support of the o.m.'s translate easily into either LP or SDP (semidefinite programming) *necessary* constraints on their moments. Even more, for (semialgebraic) compact supports, relatively recent powerful results from real algebraic geometry make these constraints also *sufficient*.
- When truncating to finitely many moments, the resulting LPs or SDPs are solvable and their optimal values form a monotone nondecreasing sequence (indexed by the number of moments considered) of lower bounds on the optimal value of the LP (and thus of the OCP). See [19, 30] for applications of this technique to nonconvex polynomial optimization.

Therefore, based on the above observations, we propose an approximation of the optimal value of the OCP via solving a hierarchy of SDPs (or linear matrix inequalities, LMIs) that provides a monotone nondecreasing sequence of lower bounds on the optimal value of the weak LP formulation of the OCP. In addition, under some compactness assumption of the state and control constraint sets, the sequence of lower

Copyright © by SIAM. Unauthorized reproduction of this article is prohibited.

bounds is shown to converge to the optimal value of the LP, and thus to the optimal value of the OCP when the former and latter are equal.

As such, it could be seen as a complement to the above shooting or direct methods and, when the sequence of lower bounds converges to the optimal value, as a test of their efficiency. Finally this approach can also be used to provide a *certificate* of infeasibility. Indeed, if, in the hierarchy of LMI-relaxations of the minimum time OCP, one is infeasible, then the OCP itself is infeasible. It turns out that sometimes this certificate is provided at an early stage in the hierarchy, i.e., with very few moments. This is illustrated in two simple examples.

In a pioneering paper, Dawson [11] had suggested the use of *moments* in the LP approach with o.m.'s, but results on the **K**-moment problem by Schmüdgen [40] and Putinar [39] were not available at that time. Later, Helmes and Stockbridge [18] and Helmes, Röhl, and Stockbridge [17] used LP moment conditions for computing some exit time moments in some diffusion model, whereas for the same models, Lasserre and Priéto-Rumeau [31] showed that SDP moment conditions are superior in terms of precision and number of moments to consider; in [32], they extended the moment approach for options pricing problems in some mathematical finance models. More recently, Lasserre, Prieur, and Henrion [33] used the o.m. approach for minimum time OCP without state constraint. Preliminary experimental results on Brockett's integrator example and on the double integrator show fast convergence with few moments.

2. Occupation measures and the LP approach.

2.1. Definition of the OCP. Let n and m be nonzero integers. Consider on $\mathbb{R}^n$ the control system

$$\dot{x}(t) = f(t, x(t), u(t)), \tag{2.1}$$

where $f : [0, +\infty) \times \mathbb{R}^n \times \mathbb{R}^m \longrightarrow \mathbb{R}^n$ is smooth, and where the controls are bounded measurable functions, defined on intervals $[0, T(\mathbf{u})]$ of $\mathbb{R}^+$, and taking their values in a *compact* subset $\mathbf{U}$ of $\mathbb{R}^m$. Let $x_0 \in \mathbb{R}^n$, and let $\mathbf{X}$ and $\mathbf{K}$ be *compact* subsets of $\mathbb{R}^n$. For $T > 0$, a control u is said to be *admissible* on $[0, T]$ whenever the solution $x(\cdot)$ of (2.1), such that $x(0) = x_0$, is well defined on $[0, T]$ and satisfies

$$(x(t), u(t)) \in \mathbf{X} \times \mathbf{U} \quad \text{a.e. on } [0, T] \tag{2.2}$$

and

$$x(T) \in \mathbf{K}. \tag{2.3}$$

Denote by $\mathcal{U}_T$ the set of *admissible controls* on $[0, T]$.

For $\mathbf{u} \in \mathcal{U}_T$, the *cost* of the associated trajectory $x(\cdot)$ is defined by

$$J(0, T, x_0, \mathbf{u}) = \int_0^T h(t, x(t), u(t))dt + H(x(T)), \tag{2.4}$$

where $h : [0, +\infty) \times \mathbb{R}^n \times \mathbb{R}^m \longrightarrow \mathbb{R}$ and $H : \mathbb{R}^n \to \mathbb{R}$ are smooth functions.

Consider the *optimal control problem* (OCP) of determining a trajectory solution of (2.1), starting from $x(0) = x_0$, satisfying the state and control constraints (2.2), the terminal constraint (2.3), and minimizing the cost (2.4). The final time T may or may not be fixed.

If the final time T is fixed, we set

$$J^*(0, T, x_0) := \inf_{\mathbf{u} \in \mathcal{U}_T} J(0, T, x_0, \mathbf{u}), \tag{2.5}$$

Copyright © by SIAM. Unauthorized reproduction of this article is prohibited.

and if T is free, we set

$$J^*(0,x_0) := \inf_{T>0,\ \mathbf{u}\in\mathcal{U}_T} J(0,T,x_0,\mathbf{u}). \tag{2.6}$$

Note that a particular OCP is the minimal time problem from x_0 to $\mathbf{K}$, by letting $h \equiv 1$, $H \equiv 0$. In this particular case, the minimal time is the first *hitting time* of the set $\mathbf{K}$.

It is possible to associate a stochastic or deterministic OCP with an abstract infinite-dimensional LP problem $\mathbf{P}$ together with its dual $\mathbf{P}^*$ (see, for instance, Hernández-Lerma and Lasserre [21] for discrete-time Markov control problems, and Vinter [45], Hernandez et al. [20] for deterministic optimal control problems, as well as the many references therein). We next describe this LP approach in the present context.

2.2. Notations and definitions. For a topological space $\mathcal{X}$, let $\mathcal{M}(\mathcal{X})$ be the Banach space of finite signed Borel measures on $\mathcal{X}$, equipped with the norm of total variation, and denote by $\mathcal{M}(\mathcal{X})_+$ its positive cone, that is, the space of finite measures on $\mathcal{X}$. Let $C(\mathcal{X})$ be the Banach space of bounded continuous functions on $\mathcal{X}$, equipped with the sup-norm. Notice that when $\mathcal{X}$ is compact Hausdorff, then $\mathcal{M}(\mathcal{X}) \simeq C(\mathcal{X})^*$; i.e., $\mathcal{M}(\mathcal{X})$ is the topological dual of $C(\mathcal{X})$.

Let $\mathbb{R}[x] = [x_1,\ldots,x_n]$ (resp., $\mathbb{R}[t,x,u] = \mathbb{R}[t,x_1,\ldots,x_n,u_1,\ldots,u_m]$) denote the set of polynomial functions of the variable x (resp., of the variables t,x,u).

Let $\mathbf{\Sigma} := [0,T]\times\mathbf{X}$, $\mathbf{S} := \mathbf{\Sigma}\times\mathbf{U}$, and let $C_1(\mathbf{\Sigma})$ be the Banach space of functions $\varphi \in C(\mathbf{\Sigma})$ that are continuously differentiable. For ease of exposition we use the same notation g (resp., h) for a polynomial $g \in \mathbb{R}[t,x]$ (resp., $h \in \mathbb{R}[x]$) and its restriction to the compact set $\mathbf{\Sigma}$ (resp., $\mathbf{K}$).

Next, with $u \in \mathbf{U}$, let $A:\ C_1(\mathbf{\Sigma}) \to C(\mathbf{S})$ be the mapping

$$\varphi \mapsto A\varphi(t,x,u) := \frac{\partial\varphi}{\partial t}(t,x) + \langle f(t,x,u), \nabla_x\varphi(t,x)\rangle. \tag{2.7}$$

Notice that $\partial\varphi/\partial t + \langle\nabla_x\varphi, f\rangle \in C(\mathbf{S})$ for every $\varphi \in C_1(\mathbf{\Sigma})$, because both $\mathbf{X}$ and $\mathbf{U}$ are compact, and f is understood as its restriction to $\mathbf{S}$.

Next, let $\mathcal{L}:\ C_1(\mathbf{\Sigma}) \to C(\mathbf{S})\times C(\mathbf{K})$ be the linear mapping

$$\varphi \mapsto \mathcal{L}\varphi := (-A\varphi, \varphi_T), \tag{2.8}$$

where $\varphi_T(x) := \varphi(T,x)$ for all $x \in \mathbf{X}$. Obviously, $\mathcal{L}$ is continuous with respect to the strong topologies of $C_1(\mathbf{\Sigma})$ and $C(\mathbf{S})\times C(\mathbf{K})$.

Both $(C(\mathbf{S}),\mathcal{M}(\mathbf{S}))$ and $(C(\mathbf{K}),\mathcal{M}(\mathbf{K}))$ form a *dual pair* of vector spaces, with duality brackets

$$\langle h,\mu\rangle = \int h\,d\mu \qquad \forall\,(h,\mu) \in C(\mathbf{S})\times\mathcal{M}(\mathbf{S})$$

and

$$\langle g,\nu\rangle = \int g\,d\nu \qquad \forall\,(g,\nu) \in C(\mathbf{K})\times\mathcal{M}(\mathbf{K}).$$

Let $\mathcal{L}^*:\ M(\mathbf{S})\times M(\mathbf{K}) \to C_1(\Sigma)^*$ be the adjoint mapping of $\mathcal{L}$, defined by

$$\langle(\mu,\nu),\mathcal{L}\varphi\rangle = \langle\mathcal{L}^*(\mu,\nu),\varphi\rangle \tag{2.9}$$

for all $((\mu,\nu),\varphi) \in M(\mathbf{S})\times M(\mathbf{K})\times C_1(\mathbf{\Sigma})$.

Copyright © by SIAM. Unauthorized reproduction of this article is prohibited.

Remark 2.1.

(i) The mapping $\mathcal{L}^*$ is continuous with respect to the weak topologies $\sigma(\mathcal{M}(\mathbf{S}) \times \mathcal{M}(\mathbf{K}), C(\mathbf{S}) \times C(\mathbf{K}))$ and $\sigma(C_1(\mathbf{\Sigma})^*, C_1(\mathbf{\Sigma}))$.

(ii) Since the mapping $\mathcal{L}$ is continuous in the strong sense, it is also continuous with respect to the weak topologies $\sigma(C_1(\mathbf{\Sigma}), C_1(\mathbf{\Sigma})^*)$ and $\sigma(C(\mathbf{S}) \times C(\mathbf{K}), \mathcal{M}(S) \times \mathcal{M}(\mathbf{K}))$.

(iii) In the case of a *free* terminal time $T \leq T_0$, it suffices to redefine $\mathcal{L} : C_1(\mathbf{\Sigma}) \to C(\mathbf{S}) \times C([0, T_0] \times \mathbf{K})$ by $\mathcal{L}\varphi := (-A\varphi, \varphi)$. The operator $\mathcal{L}^* : M(\mathbf{S}) \times M([0, T_0] \times \mathbf{K}) \to C_1(\Sigma)^*$ is still defined by (2.9) for all $((\mu, \nu), \varphi) \in M(\mathbf{S}) \times M([0, T_0] \times \mathbf{K}) \times C_1(\mathbf{\Sigma})$.
For time-homogeneous free terminal time problems, one needs functions φ of x only, and so $\mathbf{\Sigma} = \mathbf{S} = \mathbf{X} \times \mathbf{U}$ and $\mathcal{L} : C_1(\mathbf{\Sigma}) \to C(\mathbf{S}) \times C(\mathbf{K})$.

2.3. Occupation measures and primal LP formulation. Let $T > 0$, and let $\mathbf{u} = \{u(t), 0 \leq t < T\}$ be a control such that the solution of (2.1), with $x(0) = x_0$, is well defined on $[0, T]$. Define the probability measure $\nu^{\mathbf{u}}$ on $\mathbb{R}^n$, and the measure $\mu^{\mathbf{u}}$ on $[0, T] \times \mathbb{R}^n \times \mathbb{R}^m$, by

$$\nu^{\mathbf{u}}(D) := \mathrm{I}_D\,[x(T)], \quad D \in \mathcal{B}_n, \tag{2.10}$$

$$\mu^{\mathbf{u}}(A \times B \times C) := \int_{[0,T]\cap A} \mathrm{I}_{B\times C}\,[(x(t), u(t))]\,dt \tag{2.11}$$

for all *rectangles* $(A \times B \times C)$, with $(A, B, C) \in \mathcal{A} \times \mathcal{B}_n \times \mathcal{B}_m$, and where $\mathcal{B}_n$ (resp., $\mathcal{B}_m$) denotes the usual Borel σ-algebra associated with $\mathbb{R}^n$ (resp., $\mathbb{R}^m$), $\mathcal{A}$ the Borel σ-algebra of $[0, T]$, and $\mathrm{I}_B(\bullet)$ the indicator function of the set B.

The measure $\mu^{\mathbf{u}}$ is called the *occupation measure* (o.m.) of the state-action (deterministic) process $(t, x(t), u(t))$ *up to* time T, whereas $\nu^{\mathbf{u}}$ is the o.m. of the state $x(T)$ *at* time T.

Remark 2.2. If the control $\mathbf{u}$ is admissible on $[0, T]$, i.e., if the trajectory $x(\cdot)$ satisfies the constraints (2.2) and (2.3), then $\nu^{\mathbf{u}}$ is a probability measure supported on $\mathbf{K}$ (i.e., $\nu^{\mathbf{u}} \in \mathcal{M}(\mathbf{K})_+$), and $\mu^{\mathbf{u}}$ is supported on $[0, T] \times \mathbf{X} \times \mathbf{U}$ (i.e., $\mu^{\mathbf{u}} \in \mathcal{M}(\mathbf{S})_+$). In particular, $T = \mu^{\mathbf{u}}(\mathbf{S})$.

Conversely, if the support of $\mu^{\mathbf{u}}$ is contained in $\mathbf{S} = [0, T] \times \mathbf{X} \times \mathbf{U}$ and if $\mu^{\mathbf{u}}(\mathbf{S}) = T$, then $(x(t), u(t)) \in \mathbf{X} \times \mathbf{U}$ for almost every $t \in [0, T]$. Indeed, with (2.11),

$$T = \int_0^T \mathrm{I}_{\mathbf{X}\times\mathbf{U}}\,[(x(s), u(s))]\,ds$$
$$\Rightarrow \mathrm{I}_{\mathbf{X}\times\mathbf{U}}\,[(x(s), u(s))] = 1 \quad \text{a.e. in } [0, T],$$

and hence $(x(t), u(t)) \in \mathbf{X} \times \mathbf{U}$ for almost every $t \in [0, T]$. If moreover the support of $\nu^{\mathbf{u}}$ is contained in $\mathbf{K}$, then $x(T) \in \mathbf{K}$. Therefore, $\mathbf{u}$ is an admissible control on $[0, T]$.

Then observe that the optimization criterion (2.5) can now be written as

$$J(0, T, x_0, \mathbf{u}) = \int_{\mathbf{K}} H\,d\nu^{\mathbf{u}} + \int_{\mathbf{S}} h\,d\mu^{\mathbf{u}} = \langle (\mu^{\mathbf{u}}, \nu^{\mathbf{u}}), (h, H) \rangle,$$

and one infers from (2.1), (2.2), and (2.3) that

$$\int_{\mathbf{K}} g_T\,d\nu^{\mathbf{u}} - g(0, x_0) = \int_{\mathbf{S}} \left(\frac{\partial g}{\partial t} + \langle \nabla_x g, f \rangle \right) d\mu^{\mathbf{u}} \tag{2.12}$$

Copyright © by SIAM. Unauthorized reproduction of this article is prohibited.

for every $g \in C_1(\mathbf{\Sigma})$ (where $g_T(x) \equiv g(T,x)$ for every $x \in \mathbf{K}$), or equivalently, in view of (2.8) and (2.9),

$$\langle g, \mathcal{L}^*(\mu^{\mathbf{u}}, \nu^{\mathbf{u}})\rangle = \langle g, \delta_{(0,x_0)}\rangle \quad \forall g \in C_1(\mathbf{\Sigma}).$$

This in turn implies that

$$\mathcal{L}^*(\mu^{\mathbf{u}}, \nu^{\mathbf{u}}) = \delta_{(0,x_0)}.$$

Therefore, consider the infinite-dimensional linear program $\mathbf{P}$:

$$\mathbf{P}: \quad \inf_{(\mu,\nu)\in\Delta} \{\langle(\mu,\nu),(h,H)\rangle \mid \mathcal{L}^*(\mu,\nu) = \delta_{(0,x_0)}\} \tag{2.13}$$

(where $\Delta := \mathcal{M}(\mathbf{S})_+ \times \mathcal{M}(\mathbf{K})_+$). Denote by $\inf \mathbf{P}$ its optimal value and by $\min \mathbf{P}$ the infimum attained, in which case $\mathbf{P}$ is said to be *solvable*. The problem $\mathbf{P}$ is said to be *feasible* if there exists $(\mu,\nu) \in \Delta$ such that $\mathcal{L}^*(\mu,\nu) = \delta_{(0,x_0)}$.

Note that $\mathbf{P}$ is feasible whenever there exists an admissible control.

The linear program $\mathbf{P}$ is a rephrasing of the OCP (2.1)–(2.5) in terms of the *o.m.'s* of its trajectories $(t, x(t), u(t))$. Its dual LP reads

$$\mathbf{P}^*: \quad \sup_{\varphi\in C_1(\mathbf{\Sigma})} \{\langle\delta_{(0,x_0)},\varphi\rangle \mid \mathcal{L}\varphi \le (h,H)\}, \tag{2.14}$$

where

$$\mathcal{L}\varphi \le (h,H) \Leftrightarrow \begin{cases} A\varphi(t,x,u) + h(t,x,u) \ge 0 & \forall (t,x,u) \in \mathbf{S}, \\ \varphi(T,x) \le H(x) & \forall x \in \mathbf{K}. \end{cases}$$

Denote by $\sup \mathbf{P}^*$ its optimal value and by $\max \mathbf{P}^*$ the supremum attained, i.e., if $\mathbf{P}^*$ is solvable.

Discrete-time stochastic analogues of the LPs $\mathbf{P}$ and $\mathbf{P}^*$ are also described in Hernández-Lerma and Lasserre [21, 23] for discrete-time Markov control problems. Similarly, see Cho and Stockbridge [9], Kurtz and Stockbridge [29], and Helmes and Stockbridge [17] for some continuous-time stochastic problems.

THEOREM 2.3. *If* $\mathbf{P}$ *is feasible, then the following hold:*

(i) $\mathbf{P}$ *is solvable, i.e.,* $\inf \mathbf{P} = \min \mathbf{P} \le J(0,T,x_0)$.

(ii) *There is no duality gap, i.e.,* $\sup \mathbf{P}^* = \min \mathbf{P}$.

(iii) *If, moreover, for every* $(t,x) \in \mathbf{\Sigma}$ *the set* $f(t,x,\mathbf{U}) \subset \mathbb{R}^n$ *is convex, and the function*

$$v \mapsto g_{t,x}(v) := \inf_{u\in U} \{\, h(t,x,u) \ : v = f(t,x,u)\}$$

is convex, then the OCP (2.1)–(2.5) *has an optimal solution and*

$$\sup \mathbf{P}^* = \inf \mathbf{P} = \min \mathbf{P} = J^*(0,T,x_0).$$

For a proof see section A.1. Theorem 2.3(iii) is due to Vinter [45].

3. Semidefinite programming relaxations of P. The LP $\mathbf{P}$ is infinite-dimensional, and thus not tractable as it stands. Therefore, we next present a relaxation scheme that provides a sequence of SDPs, or linear matrix inequality relaxations (in short, LMI-relaxations) $\{\mathbf{Q}_r\}$, each with *finitely many* constraints and variables.

Copyright © by SIAM. Unauthorized reproduction of this article is prohibited.

Assume that $\mathbf{X}$ and $\mathbf{K}$ (resp., $\mathbf{U}$) are compact semialgebraic subsets of $\mathbb{R}^n$ (resp., of $\mathbb{R}^m$) of the form

$$\mathbf{X} := \{x \in \mathbb{R}^n \mid v_j(x) \geq 0, \quad j \in J\}, \tag{3.1}$$

$$\mathbf{K} := \{x \in \mathbb{R}^n \mid \theta_j(x) \geq 0, \quad j \in J_T\}, \tag{3.2}$$

$$\mathbf{U} := \{u \in \mathbb{R}^m \mid w_j(u) \geq 0, \quad j \in W\} \tag{3.3}$$

for some finite index sets J_T, J, and W, where v_j, θ_j, and w_j are polynomial functions. Define

$$d(\mathbf{X}, \mathbf{K}, \mathbf{U}) := \max_{j \in J_1,\ l \in J,\ k \in W} (\deg \theta_j, \deg v_l, \deg w_k). \tag{3.4}$$

To highlight the main ideas, in this section we assume that f, h, and H are polynomial functions, that is, $h \in \mathbb{R}[t, x, u]$, $H \in \mathbb{R}[x]$, and $f : [0, +\infty) \times \mathbb{R}^n \times \mathbb{R}^m \to \mathbb{R}^n$ is polynomial; i.e., every component of f satisfies $f_k \in \mathbb{R}[t, x, u]$ for $k = 1, \ldots, n$.

3.1. The underlying idea. Observe the following important facts.

The restriction of $\mathbb{R}[t, x]$ to $\mathbf{\Sigma}$ belongs to $C_1(\mathbf{\Sigma})$. Therefore,

$$\mathcal{L}^*(\mu, \nu) = \delta_{(0,x_0)} \quad \Leftrightarrow \quad \langle g, \mathcal{L}^*(\mu, \nu)\rangle = g(0, x_0) \quad \forall g \in \mathbb{R}[t, x],$$

because $\mathbf{\Sigma}$ being compact, polynomial functions are *dense* in $C_1(\mathbf{\Sigma})$ for the sup-norm. Indeed, on a compact set, one may *simultaneously* approximate a function and its (continuous) partial derivatives by a polynomial and its derivatives uniformly (see [26, pp. 65–66]). Hence, the LP $\mathbf{P}$ can be written

$$\mathbf{P} : \left\{ \begin{array}{l} \inf\limits_{(\mu,\nu)\in\Delta} \langle (\mu, \nu), (h, H)\rangle \\ \text{s.t.} \quad \langle g, \mathcal{L}^*(\mu, \nu)\rangle = g(0, x_0) \quad \forall g \in \mathbb{R}[t, x], \end{array} \right.$$

or equivalently, by linearity,

$$\mathbf{P} : \left\{ \begin{array}{l} \inf\limits_{(\mu,\nu)\in\Delta} \langle (\mu, \nu), (h, H)\rangle \\ \text{s.t.} \quad \langle \mathcal{L}g, (\mu, \nu)\rangle = g(0, x_0) \quad \forall\, g = (t^p\, x^\alpha);\ (p, \alpha) \in \mathbb{N} \times \mathbb{N}^n. \end{array} \right. \tag{3.5}$$

The constraints of $\mathbf{P}$,

$$\langle \mathcal{L}g, (\mu, \nu)\rangle = g(0, x_0) \quad \forall\, g = (t^p\, x^\alpha);\ (p, \alpha) \in \mathbb{N} \times \mathbb{N}^n, \tag{3.6}$$

define countably many *linear* equality constraints linking the *moments* of μ and ν, because if g is polynomial, then so are $\partial g/\partial t$ and $\partial g/\partial x_k$, for every k, and $\langle \nabla_x g, f\rangle$. And so, $\mathcal{L}g$ is polynomial.

The functions h, H being also polynomial, the cost $\langle (\mu, \nu), (h, H)\rangle$ of the OCP (2.1)–(2.5) is also a linear combination of the moments of μ and ν.

Therefore, the LP $\mathbf{P}$ in (3.5) can be formulated as an LP with countably many variables (the moments of μ and ν) and countably many linear equality constraints. However, it remains to express the fact that the variables should be moments of some measures μ and ν, with support contained in $\mathbf{S}$ and $\mathbf{K}$, respectively.

At this stage, one will make some (weak) additional assumptions on the polynomials that define the compact semialgebraic sets $\mathbf{X}, \mathbf{K}$, and $\mathbf{U}$. Under such assumptions, one may then invoke recent results of real algebraic geometry on the representation of

Copyright © by SIAM. Unauthorized reproduction of this article is prohibited.

polynomials positive on a compact set, and get necessary and sufficient conditions on the variables of $\mathbf{P}$ to be indeed moments of two measures μ and ν, with appropriate support. We will use Putinar's Positivstellensatz [39] described in the next section, which yields SDP constraints on the variables.

One might also use other representation results like, e.g., Krivine [28] and Vasilescu [44] and obtain *linear* constraints on the variables (as opposed to SDP constraints). This is the approach taken by, e.g., Helmes, Röhl, and Stockbridge [17]. However, a comparison of the use of LP constraints versus SDP constraints on a related problem [31] has dictated our choice of the former.

Finally, if g in (3.6) runs only over all monomials of degree less than r, one then obtains a corresponding relaxation $\mathbf{Q}_r$ of $\mathbf{P}$, which is now a finite-dimensional SDP that one may solve with public software packages. At last, one lets $r \to \infty$.

3.2. Notations, definitions, and auxiliary results. For a multi-index $\alpha = (\alpha_1, \ldots, \alpha_n) \in \mathbb{N}^n$, and for $x = (x_1, \ldots, x_n) \in \mathbb{R}^n$, denote $x^\alpha := x_1^{\alpha_1} \cdots x_n^{\alpha_n}$. Consider the canonical basis $\{x^\alpha\}_{\alpha \in \mathbb{N}^n}$ (resp., $\{t^p x^\alpha u^\beta\}_{p \in \mathbb{N}, \alpha \in \mathbb{N}^n, \beta \in \mathbb{N}^m}$) of $\mathbb{R}[x]$ (resp., of $\mathbb{R}[t, x, u]$).

Given two sequences $y = \{y_\alpha\}_{\alpha \in \mathbb{N}^n}$ and $z = \{z_\gamma\}_{\gamma \in \mathbb{N} \times \mathbb{N}^n \times \mathbb{N}^m}$ of real numbers, define the linear functional $L_y : \mathbb{R}[x] \to \mathbb{R}$ by

$$H \left(:= \sum_{\alpha \in \mathbb{N}^n} H_\alpha x^\alpha \right) \mapsto L_y(H) := \sum_{\alpha \in \mathbb{N}^n} H_\alpha y_\alpha,$$

and similarly, define the linear functional $L_z : \mathbb{R}[t, x, u] \to \mathbb{R}$ by

$$h \mapsto L_z(h) := \sum_{\gamma \in \mathbb{N} \times \mathbb{N}^n \times \mathbb{N}^m} h_\gamma \, z_\gamma = \sum_{p \in \mathbb{N}, \alpha \in \mathbb{N}^n, \beta \in \mathbb{N}^m} h_{p\alpha\beta} \, z_{p\alpha\beta},$$

where $h(t, x, u) = \sum_{p \in \mathbb{N}, \alpha \in \mathbb{N}^n, \beta \in \mathbb{N}^m} h_{p\alpha\beta} \, t^p x^\alpha u^\beta$.

Note that for a given measure ν (resp., μ) on $\mathbb{R}$ (resp., on $\mathbb{R} \times \mathbb{R}^n \times \mathbb{R}^m$), there holds, for every $H \in \mathbb{R}[x]$ (resp., for every $h \in \mathbb{R}[t, x, u]$),

$$\langle \nu, H \rangle = \int_{\mathbb{R}} H d\nu = \int_{\mathbb{R}} \sum H_\alpha x^\alpha d\nu = \sum H_\alpha y_\alpha = L_y(H),$$

where the real numbers $y_\alpha = \int x^\alpha d\nu$ are the moments of the measure ν (resp., $\langle \mu, h \rangle = L_z(h)$, where z is the sequence of moments of the measure μ).

DEFINITION 3.1. *For a given sequence $z = \{z_\gamma\}_{\gamma \in \mathbb{N} \times \mathbb{N}^n \times \mathbb{N}^m}$ of real numbers, the* moment *matrix $M_r(z)$ of order r associated with z has its rows and columns indexed in the canonical basis $\{t^p x^\alpha u^\beta\}$ and is defined by*

$$M_r(z)(\gamma, \beta) = z_{\gamma+\beta}, \quad \gamma, \beta \in \mathbb{N} \times \mathbb{N}^n \times \mathbb{N}^m, \quad |\gamma|, |\beta| \leq r, \tag{3.7}$$

where $|\gamma| := \sum_j \gamma_j$. The moment matrix $M_r(y)$ of order r associated with a given sequence $y = \{y_\alpha\}_{\alpha \in \mathbb{N}^n}$ has its rows and columns indexed in the canonical basis $\{x^\alpha\}$ and is defined in a similar fashion.

Note that if z has a representing measure μ, i.e., if z is the sequence of moments of the measure μ on $\mathbb{R} \times \mathbb{R}^n \times \mathbb{R}^m$, then $L_z(h) = \int h d\mu$ for every $h \in \mathbb{R}[t, x, u]$, and if $\mathbf{h}$ denotes the vector of coefficients of $h \in \mathbb{R}[t, x, u]$ of degree less than r, then

$$\langle \mathbf{h}, M_r(z)\mathbf{h} \rangle = L_z(h^2) = \int h^2 \, d\mu \geq 0.$$

Copyright © by SIAM. Unauthorized reproduction of this article is prohibited.

This implies that $M_r(z)$ is symmetric nonnegative (denoted $M_r(z) \succeq 0$) for every r. The same holds for $M_r(y)$.

Conversely, not every sequence y that satisfies $M_r(y) \succeq 0$ for every r has a representing measure. However, several sufficient conditions exist, in particular the following one due to Berg [3].

PROPOSITION 3.2. *If $y = \{y_\alpha\}_{\alpha\in\mathbb{N}^n}$ satisfies $|y_\alpha| \leq 1$ for every $\alpha \in \mathbb{N}^n$, and $M_r(y) \succeq 0$ for every integer r, then y has a representing measure on $\mathbb{R}^n$, with support contained in the unit ball $[-1,1]^n$.*

We next present another sufficient condition which is crucial in the proof of our main result.

DEFINITION 3.3. *For a given polynomial $\theta \in \mathbb{R}[t,x,u]$, written*

$$\theta(t,x,u) = \sum_{\delta=(p,\alpha,\beta)} \theta_\delta\, t^p x^\alpha u^\beta,$$

define the localizing *matrix $M_r(\theta\, z)$ associated with z, θ, and with rows and columns also indexed in the canonical basis of $\mathbb{R}[t,x,u]$, by*

$$M_r(\theta\, z)(\gamma,\beta) = \sum_\delta \theta_\delta\, z_{\delta+\gamma+\beta} \quad \gamma,\beta \in \mathbb{N}\times\mathbb{N}^n\times\mathbb{N}^m, \quad |\gamma|,\, |\beta| \leq r. \tag{3.8}$$

The localizing matrix $M_r(\theta\, y)$ associated with a given sequence $y = \{y_\alpha\}_{\alpha\in\mathbb{N}^n}$ is defined similarly.

Note that if z has a representing measure μ on $\mathbb{R}\times\mathbb{R}^n\times\mathbb{R}^m$ with support contained in the level set $\{(t,x,u) :\ \theta(t,x,u) \geq 0\}$, and if $h \in \mathbb{R}[t,x,u]$ has degree less than r, then

$$\langle \mathbf{h}, M_r(\theta,z)\mathbf{h}\rangle = L_z(\theta\, h^2) = \int \theta h^2\, d\mu \geq 0.$$

Hence, $M_r(\theta\, z) \succeq 0$ for every r.

Let $\Sigma^2 \subset \mathbb{R}[x]$ be the convex cone generated in $\mathbb{R}[x]$ by all squares of polynomials, and let $\Omega \subset \mathbb{R}^n$ be the compact basic semialgebraic set defined by

$$\Omega := \{x \in \mathbb{R}^n | g_j(x) \geq 0, \quad j = 1,\ldots,m\} \tag{3.9}$$

for some family $\{g_j\}_{j=1}^m \subset \mathbb{R}[x]$.

DEFINITION 3.4. *The set $\Omega \subset \mathbb{R}^n$ defined by* (3.9) *satisfies Putinar's condition if there exists $u \in \mathbb{R}[x]$ such that $u = u_0 + \sum_{j=1}^m u_j g_j$ for some family $\{u_j\}_{j=0}^m \subset \Sigma^2$, and the level set $\{x \in \mathbb{R}^n \mid u(x) \geq 0\}$ is compact.*

Putinar's condition is satisfied if, e.g., the level set $\{x :\ g_k(x) \geq 0\}$ is compact for some k, or if all the g_j's are linear, in which case Ω is a polytope. In addition, if one knows some M such that $\|x\| \leq M$ whenever $x \in \Omega$, then it suffices to add the redundant quadratic constraint $M^2 - \|x\|^2 \geq 0$ in the definition (3.9) of Ω, and Putinar's condition is satisfied (take $u := M^2 - \|x\|^2$).

THEOREM 3.5 (Putinar's Positivstellensatz [39]). *Assume that the set Ω defined by* (3.9) *satisfies Putinar's condition.*

(a) *If $f \in \mathbb{R}[x]$ and $f > 0$ on Ω, then*

$$f = f_0 + \sum_{j=1}^m f_j\, g_j \tag{3.10}$$

for some family $\{f_j\}_{j=0}^m \subset \Sigma^2$.

Copyright © by SIAM. Unauthorized reproduction of this article is prohibited.

(b) *Let* $y = \{y_\alpha\}_{\alpha\in\mathbb{N}^n}$ *be a sequence of real numbers. If*

$$M_r(y) \succeq 0\,; \quad M_r(g_j\, y) \succeq 0, \quad j = 1,\ldots,m; \quad \forall\, r = 0,1,\ldots, \tag{3.11}$$

then y *has a representing measure with support contained in* Ω.

3.3. LMI-relaxations of P. Consider the LP **P** defined by (3.5).

Since the semialgebraic sets $\mathbf{X}, \mathbf{K}$, and $\mathbf{U}$ defined, respectively, by (3.1), (3.2), and (3.3) are compact, with no loss of generality we assume (up to a scaling of the variables x, u, and t) that $T = 1$, $\mathbf{X}, \mathbf{K} \subseteq [-1,1]^n$, and $\mathbf{U} \subseteq [-1,1]^m$.

Next, given a sequence $z = \{z_\gamma\}$ indexed in the basis of $\mathbb{R}[t,x,u]$, denote $z(t)$, $z(x)$, and $z(u)$ its marginals with respect to the variables t, x, and u, respectively. These sequences are indexed in the canonical basis of $\mathbb{R}[t]$, $\mathbb{R}[x]$, and $\mathbb{R}[u]$, respectively. For instance, writing $\gamma = (k,\alpha,\beta) \in \mathbb{N}\times\mathbb{N}^n\times\mathbb{N}^n$,

$$\{z(t)\} = \{z_{k,0,0}\}_{k\in\mathbb{N}}; \quad \{z(x)\} = \{z_{0,\alpha,0}\}_{\alpha\in\mathbb{N}^n}; \quad \{z(u)\} = \{z_{0,0,\beta}\}_{\beta\in\mathbb{N}^m}.$$

Let r_0 be an integer such that $2r_0 \geq \max(\deg f, \deg h, \deg H,\, 2d(\mathbf{X},\mathbf{K},\mathbf{U}))$, where $d(\mathbf{X},\mathbf{K},\mathbf{U})$ is defined by (3.4). For every $r \geq r_0$, consider the LMI-relaxation

$$\mathbf{Q}_r : \left\{ \begin{array}{l} \inf\limits_{y,z} \quad L_z(h) + L_y(H), \\ M_r(y),\, M_r(z) \succeq 0, \\ M_{r-\deg\theta_j}(\theta_j\, y) \succeq 0, \quad j \in J_1, \\ M_{r-\deg v_j}(v_j\, z(x)) \succeq 0, \quad j \in J, \\ M_{r-\deg w_k}(w_k\, z(u)) \succeq 0, \quad k \in W, \\ M_{r-1}(t(1-t)\, z(t)) \succeq 0, \\ L_y(g_1) - L_z(\partial g/\partial t + \langle \nabla_x g, f\rangle) = g(0,x_0) \quad \forall g = (t^p x^\alpha), \\ \text{with } \; p + |\alpha| - 1 + \deg f \leq 2r, \end{array} \right. \tag{3.12}$$

whose optimal value is denoted by $\inf \mathbf{Q}_r$.

OCP with free terminal time. For the OCP (2.6), i.e., with *free* terminal time $T \leq T_0$, we need to adapt the notation because T is now a variable. As already mentioned in Remark 2.1(iii), the measure ν in the infinite-dimensional LP **P** defined in (2.13) is now supported in $[0,T_0]\times\mathbf{K}$ (and $[0,1]\times\mathbf{K}$ after rescaling) instead of $\mathbf{K}$ previously. Hence, the sequence y associated with ν is now indexed in the basis $\{t^p x^\alpha\}$ of $\mathbb{R}[t,x]$ instead of $\{x^\alpha\}$ previously. Therefore, given $y = \{y_{k\alpha}\}$ indexed in that basis, let $y(t)$ and $y(x)$ be the subsequences of y defined by

$$y(t) := \{y_{k0}\}_k, \quad k \in \mathbb{N}; \quad y(x) = \{y_{0\alpha}\}, \quad \alpha \in \mathbb{N}^n.$$

Then again (after rescaling), the LMI-relaxation $\mathbf{Q}_r$ now reads

$$\mathbf{Q}_r : \left\{ \begin{array}{l} \inf\limits_{y,z} \quad L_z(h) + L_y(H), \\ M_r(y),\, M_r(z) \succeq 0, \\ M_{r-r(\theta_j)}(\theta_j\, y) \succeq 0, \quad j \in J_1, \\ M_{r-r(v_j)}(v_j\, z(x)) \succeq 0, \quad j \in J, \\ M_{r-r(w_k)}(w_k\, z(u)) \succeq 0, \quad k \in W, \\ M_{r-1}(t(1-t)\, y(t)) \succeq 0, \\ M_{r-1}(t(1-t)\, z(t)) \succeq 0, \\ L_y(g) - L_z(\partial g/\partial t + \langle \nabla_x g, f\rangle) = g(0,x_0) \quad \forall g = (t^p x^\alpha), \\ \text{with } \; p + |\alpha| - 1 + \deg f \leq 2r. \end{array} \right. \tag{3.13}$$

Copyright © by SIAM. Unauthorized reproduction of this article is prohibited.

The particular case of the minimal time problem is obtained with $h \equiv 1$, $H \equiv 0$.

For *time-homogeneous* problems, i.e., when h and f do not depend on t, one may take μ (resp., ν) supported on $\mathbf{X} \times \mathbf{U}$ (resp., $\mathbf{K}$), which simplifies the associated LMI-relaxation (3.13).

The following is the main result.

THEOREM 3.6. *Let* $\mathbf{X}, \mathbf{K} \subset [-1,1]^n$ *and* $\mathbf{U} \subset [-1,1]^m$ *be compact basic semi-algebraic sets defined, respectively, by* (3.1), (3.2), *and* (3.3). *Assume that* $\mathbf{X}, \mathbf{K}$, *and* $\mathbf{U}$ *satisfy Putinar's condition (see Definition* 3.4*), and let* $\mathbf{Q}_r$ *be the LMI-relaxation defined in* (3.12). *Then*

(i) $\inf \mathbf{Q}_r \uparrow \min \mathbf{P}$ *as* $r \to \infty$;

(ii) *if, moreover, for every* $(t,x) \in \mathbf{\Sigma}$, *the set* $f(t,x,\mathbf{U}) \subset \mathbb{R}^n$ *is convex and the function*

$$v \mapsto g_{t,x}(v) := \inf_{u \in U} \{\, h(t,x,u) \mid v = f(t,x,u)\}$$

is convex, then $\inf \mathbf{Q}_r \uparrow \min \mathbf{P} = J^*(0,T,x_0)$, *as* $r \to \infty$.

The proof of this result is postponed to section A.2 of the appendix.

Remark 3.7. It is known that the HJB optimality equation

$$\inf_{u \in U} \{A\, v(s,x,u) + h(s,x,u)\} = 0, \quad (s,x) \in \mathbf{\Sigma}, \tag{3.14}$$

with boundary condition $v_T(x)\,(=\, v(T,x)) \,=\, H(x)$ for all $x \in \mathbf{K}$, may have no continuously differentiable solution $v : [0,T] \times \mathbb{R}^n \to \mathbb{R}$, because of possible shocks of characteristics. On the other hand, a function $\varphi \in C_1(\mathbf{\Sigma})$ is said to be a smooth *subsolution* of the HJB equation (3.14) if it is a feasible solution of $\mathbf{P}^*$, i.e.,

$$A\,\varphi(t,x,u) + h(t,x,u) \,\geq\, 0, \quad (t,x,u) \in \mathbf{S}; \quad \varphi(T,x) \,\leq\, H(x), \quad x \in \mathbf{K}; \tag{3.15}$$

see, e.g., Vinter [45]. The dual of the LMI-relaxation $\mathbf{Q}_r$, which is also an SDP denoted $\mathbf{Q}_r^*$, is a reinforcement of $\mathbf{P}^*$ in the sense that we consider only polynomial subsolutions, and, in addition, the positivity condition in (3.15) is replaced by the Putinar representation (3.10). Next, as $\mathbf{Q}_r^*$ is an approximation of $\mathbf{P}^*$, a topic of further research, beyond the scope of the present paper, is how to use $\mathbf{Q}_r^*$ to provide some information on an optimal solution of the OCP (2.1)–(2.5).

3.4. Certificates of uncontrollability. For minimum time OCPs, i.e., with free terminal time T and instantaneous cost $h \equiv 1$ and $H \equiv 0$, the LMI-relaxations $\mathbf{Q}_r$ defined in (3.13) may provide *certificates* of uncontrollability.

Indeed, if for a given initial state $x_0 \in \mathbf{X}$ some LMI-relaxation $\mathbf{Q}_r$ in the hierarchy has *no* feasible solution, then the initial state x_0 *cannot* be steered to the origin in finite time. In other words, $\inf \mathbf{Q}_r = +\infty$ provides a certificate of uncontrollability of the initial state x_0. It turns out that sometimes such certificates can be provided at cheap cost, i.e., with LMI-relaxations of low order r. This is illustrated on the Zermelo problem in section 5.3.

Moreover, one may also consider controllability in given finite time T; that is, consider the LMI-relaxations as defined in (3.12) with T fixed and $H \equiv 0$, $h \equiv 1$. Again, if for a given initial state $x_0 \in \mathbf{X}$ the LMI-relaxation $\mathbf{Q}_r$ has no feasible solution, then the initial state x_0 cannot be steered to the origin in less than T units of time. And so $\inf \mathbf{Q}_r = +\infty$ also provides a certificate of uncontrollability of the initial state x_0.

Copyright © by SIAM. Unauthorized reproduction of this article is prohibited.

4. Generalization to smooth OCPs. In the previous section, we assumed, to highlight the main ideas, that f, h, and H were polynomials. In this section, we generalize Theorem 3.6 and simply assume that f, h, and H are smooth. Consider the LP $\mathbf{P}$ defined in the previous section:

$$\mathbf{P}: \left\{ \begin{array}{l} \inf\limits_{(\mu,\nu)\in\Delta} \{\langle(\mu,\nu),(h,H)\rangle \\ \text{s.t.} \quad \langle g, \mathcal{L}^*(\mu,\nu)\rangle = g(0,x_0) \quad \forall g \in \mathbb{R}[t,x]. \end{array} \right.$$

Since the sets $\mathbf{X}$, $\mathbf{K}$, and $\mathbf{U}$, defined previously, are compact, it follows from [10] (see also [26, pp. 65–66]) that f (resp., h, H) is the limit in $C_1(\mathbf{S})$ (resp., $C_1(\mathbf{S})$, $C_1(\mathbf{K})$) of a sequence of polynomials f_p (resp., h_p, H_p) of degree p as $p \to +\infty$.

Hence, for every integer p, consider the LP $\mathbf{P}_p$,

$$\mathbf{P}_p: \left\{ \begin{array}{l} \inf\limits_{(\mu,\nu)\in\Delta} \{\langle(\mu,\nu),(h_p,H_p)\rangle \\ \text{s.t.} \quad \langle g, \mathcal{L}_p^*(\mu,\nu)\rangle = g(0,x_0) \quad \forall g \in \mathbb{R}[t,x], \end{array} \right.$$

to be the smooth analogue of $\mathbf{P}$, where the linear mapping $\mathcal{L}_p : C_1(\mathbf{\Sigma}) \to C(\mathbf{S}) \times C(\mathbf{K})$ is defined by

$$\mathcal{L}_p\varphi := (-A_p\varphi, \varphi_T),$$

and where $A_p : C_1(\mathbf{\Sigma}) \to C(\mathbf{S})$ is defined by

$$A_p\varphi(t,x,u) := \frac{\partial\varphi}{\partial t}(t,x) + \langle f_p(t,x,u), \nabla_x\varphi(t,x)\rangle.$$

For every integer $r \geq \max(p/2, d(\mathbf{X},\mathbf{K},\mathbf{U}))$, let $\mathbf{Q}_{r,p}$ denote the LMI-relaxation (3.12) associated with the LP $\mathbf{P}_p$.

Recall that from Theorem 3.6 if $\mathbf{K}$, $\mathbf{X}$, and $\mathbf{U}$ satisfy Putinar's condition, then $\inf \mathbf{Q}_{r,p} \uparrow \min \mathbf{P}_p$ as $r \to +\infty$.

The next result, generalizing Theorem 3.6, shows that it is possible to let p tend to $+\infty$. For convenience, set

$$v_{r,p} = \inf \mathbf{Q}_{r,p}, \quad v_p = \min \mathbf{P}_p, \quad v = \min \mathbf{P}.$$

THEOREM 4.1. *Let $\mathbf{X},\mathbf{K} \subset [-1,1]^n$ and $\mathbf{U} \subset [-1,1]^m$ be compact semialgebraic sets defined, respectively, by* (3.1), (3.2), *and* (3.3). *Assume that $\mathbf{X},\mathbf{K}$, and $\mathbf{U}$ satisfy Putinar's condition (see Definition* 3.4*). Then*

(i) $v = \lim_{p\to+\infty} \lim_{\substack{r\to+\infty \\ 2r>p}} v_{r,p} = \lim_{p\to+\infty} \sup_{r>p/2} v_{r,p} \;\leq\; J^*(0,T,x_0)$;

(ii) *moreover, if for every $(t,x) \in \mathbf{\Sigma}$, the set $f(t,x,\mathbf{U}) \subset \mathbb{R}^n$ is convex and the function*

$$v \mapsto g_{t,x}(v) := \inf_{u\in U} \{\, h(t,x,u) \mid v = f(t,x,u)\}$$

is convex, then $v = J^*(0,T,x_0)$.

The proof of this result is in section A.3 of the appendix.

From the numerical point of view, depending on the functions f, h, H, the degree of the polynomials of the approximate OCP $\mathbf{P}_p$ may be required to be large, and hence the hierarchy of LMI-relaxations $(\mathbf{Q}_r)$ in (3.12) might not be efficiently implementable, at least in view of the performances of public SDP solvers presently available.

Copyright © by SIAM. Unauthorized reproduction of this article is prohibited.

Remark 4.2. The previous construction extends to smooth OCPs on Riemannian manifolds, as follows. Let M and N be smooth Riemannian manifolds. Consider on M the control system (2.1), where $f : [0, +\infty) \times M \times N \longrightarrow TM$ is smooth, and where the controls are bounded measurable functions, defined on intervals $[0, T(\mathbf{u})]$ of $\mathbb{R}^+$, and taking their values in a *compact* subset $\mathbf{U}$ of N. Let $x_0 \in M$, and let $\mathbf{X}$ and $\mathbf{K}$ be compact subsets of M. Admissible controls are defined as previously. For an admissible control $\mathbf{u}$ on $[0, T]$, the cost of the associated trajectory $x(\cdot)$ is defined by (2.4), where $h : [0, +\infty) \times M \times N \longrightarrow \mathbb{R}$ and $H : M \to \mathbb{R}$ are smooth functions.

According to the Nash embedding theorem [35], there exists an integer n (resp., m) such that M (resp., N) is smoothly isometrically embedded in $\mathbb{R}^n$ (resp., $\mathbb{R}^m$). In this context, all previous results apply.

This remark is important for the applicability of the method described in this article. Indeed, many practical control problems (particularly in mechanics) are expressed on manifolds, and since the OCP investigated here is global, such problems cannot be expressed in general as control systems in $\mathbb{R}^n$ (in a global chart).

5. Illustrative examples. We consider here the minimal time OCP, that is, we aim to approximate the *minimal time* to steer a given initial condition to the origin. We have tested the above methodology on two test OCPs, the double integrator and the Brockett integrator, for which the associated optimal value T^* can be calculated exactly. The numerical examples in this section were processed with our MATLAB package *GloptiPoly* 3.[1]

5.1. The double integrator. Consider the double integrator system in $\mathbb{R}^2$,

$$\begin{aligned} \dot{x}_1(t) &= x_2(t), \\ \dot{x}_2(t) &= u(t), \end{aligned} \tag{5.1}$$

where $x = (x_1, x_2)$ is the state and the control $\mathbf{u} = u(t) \in \mathcal{U}$ satisfies the constraint $|u(t)| \leq 1$ for all $t \geq 0$. In addition, the state is constrained to satisfy $x_2(t) \geq -1$ for all t. In this time-homogeneous case, and with the notation of section 2, we have $\mathbf{X} = \{x \in \mathbb{R}^2 \,:\, x_2 \geq -1\}$, $\mathbf{K} = \{(0, 0)\}$, and $\mathbf{U} = [-1, 1]$.

Observe that $\mathbf{X}$ is not compact and so the convergence result of Theorem 3.6 may not hold. In fact, we may impose the additional constraint $\|x(t)\|_\infty \leq M$ for some large M (and modify $\mathbf{X}$ accordingly), because for initial states x_0 with $\|x_0\|_\infty$ relatively small with respect to M, the optimal trajectory remains in $\mathbf{X}$. However, in the numerical experiments, we have not enforced an additional constraint. We have maintained the original constraint $x_2 \geq -1$ in the localizing constraint $M_{r-r(v_j)}(v_j z(x)) \succeq 0$, with $x \mapsto v_j(x) = x_2 + 1$.

5.1.1. Exact computation. For this very simple system, one is able to compute exactly the optimal minimum time [43]. Denoting $T(x)$ the minimal time to reach the origin from $x = (x_1, x_2)$, we have the following:

If $x_1 \geq 1 - x_2^2/2$ and $x_2 \geq -1$, then $T(x) = x_2^2/2 + x_1 + x_2 + 1$. If $-x_2^2/2 \operatorname{sign} x_2 \leq x_1 \leq 1 - x_2^2/2$ and $x_2 \geq -1$, then $T(x) = 2\sqrt{x_2^2/2 + x_1} + x_2$. If $x_1 < -x_2^2/2 \operatorname{sign} x_2$ and $x_2 \geq -1$, then $T(x) = 2\sqrt{x_2^2/2 - x_1} - x_2$. Note that the expressions in section III.A.1 of [33] are incorrect.

5.1.2. Numerical approximation. Table 1 displays the values of the initial state $x_0 \in \mathbf{X}$, and denoting $\inf \mathbf{Q}_r(x_0)$ the optimal value of the LMI-relaxation (3.13) for the minimum time OCP (5.1) with initial state x_0, Tables 2, 3, and 4 display

[1] *GloptiPoly* 3 can be downloaded from www.laas.fr/∼henrion/software.

Copyright © by SIAM. Unauthorized reproduction of this article is prohibited.

TABLE 1
Double integrator: data initial state $x_0 = (x_{01}, x_{02})$.

x_{01}	0.0	0.2	0.4	0.6	0.8	1.0	1.2	1.4	1.6	1.8	2.0
x_{02}	−1.0	−0.8	−0.6	−0.4	−0.2	0.0	0.2	0.4	0.6	0.8	1.0

TABLE 2
Double integrator: ratio $\inf \mathbf{Q}_2/T(x_0)$.

Second LMI-relaxation: $r = 2$										
0.4598	0.3964	0.3512	0.9817	0.9674	0.9634	0.9628	0.9608	0.9600	0.9596	0.9595
0.4534	0.3679	0.9653	0.9347	0.9355	0.9383	0.9385	0.9386	0.9413	0.9432	0.9445
0.4390	0.9722	0.8653	0.8457	0.8518	0.8639	0.8720	0.8848	0.8862	0.8983	0.9015
0.4301	0.7698	0.7057	0.7050	0.7286	0.7542	0.7752	0.7964	0.8085	0.8187	0.8351
0.4212	0.4919	0.5039	0.5422	0.5833	0.6230	0.6613	0.6870	0.7121	0.7329	0.7513
0.0000	0.2238	0.3165	0.3877	0.4476	0.5005	0.5460	0.5839	0.6158	0.6434	0.6671
0.4501	0.3536	0.3950	0.4403	0.4846	0.5276	0.5663	0.5934	0.6204	0.6474	0.6667
0.4878	0.4493	0.4699	0.5025	0.5342	0.5691	0.5981	0.6219	0.6446	0.6647	0.6824
0.5248	0.5142	0.5355	0.5591	0.5840	0.6124	0.6312	0.6544	0.6689	0.6869	0.7005
0.5629	0.5673	0.5842	0.6044	0.6296	0.6465	0.6674	0.6829	0.6906	0.7083	0.7204
0.6001	0.6099	0.6245	0.6470	0.6617	0.6792	0.6972	0.7028	0.7153	0.7279	0.7369

TABLE 3
Double integrator: ratio $\inf \mathbf{Q}_3/T(x_0)$.

Third LMI-relaxation: $r = 3$										
0.5418	0.4400	0.3630	0.9989	0.9987	0.9987	0.9985	0.9984	0.9983	0.9984	0.9984
0.5115	0.3864	0.9803	0.9648	0.9687	0.9726	0.9756	0.9778	0.9798	0.9815	0.9829
0.4848	0.9793	0.8877	0.8745	0.8847	0.8997	0.9110	0.9208	0.9277	0.9339	0.9385
0.4613	0.7899	0.7321	0.7401	0.7636	0.7915	0.8147	0.8339	0.8484	0.8605	0.8714
0.4359	0.5179	0.5361	0.5772	0.6205	0.6629	0.7013	0.7302	0.7540	0.7711	0.7891
0.0000	0.2458	0.3496	0.4273	0.4979	0.5571	0.5978	0.6409	0.6719	0.6925	0.7254
0.4556	0.3740	0.4242	0.4789	0.5253	0.5767	0.6166	0.6437	0.6807	0.6972	0.7342
0.4978	0.4709	0.5020	0.5393	0.5784	0.6179	0.6477	0.6776	0.6976	0.7192	0.7347
0.5396	0.5395	0.5638	0.5955	0.6314	0.6600	0.6856	0.7089	0.7269	0.7438	0.7555
0.5823	0.5946	0.6190	0.6453	0.6703	0.7019	0.7177	0.7382	0.7539	0.7662	0.7767
0.6255	0.6434	0.6656	0.6903	0.7193	0.7326	0.7543	0.7649	0.7776	0.7917	0.8012

the numerical values of the ratios $\inf \mathbf{Q}_r(x_0)/T(x_0)$ for $r = 2, 3$, and 5, respectively. Columns and rows in Tables 2, 3, and 4 are, respectively, indexed by values of x_{01} and x_{02} indicated in Table 1. A ratio near 1 indicates a good approximation in relative value.

Figures 1, 2, and 3 display the level sets of the ratios $\inf \mathbf{Q}_r/T(x_0)$ for $r = 2, 3$, and 5, respectively. The closer the color is to white, the closer the ratio $\inf \mathbf{Q}_r/T(x_0)$ is to 1.

Finally, for this double integrator example we have plotted in Figure 4 the level sets of the function $\Lambda_5(x) - T(x)$, where $T(x)$ is the known optimal minimum time to steer the initial state x to 0; the problem being time-homogeneous, one may take $\Lambda_r \in \mathbb{R}[x]$ instead of $\mathbb{R}[t, x]$. For instance, one may verify that when the initial state is in the region where the approximation is good, then the whole optimal trajectory also lies in that region.

Copyright © by SIAM. Unauthorized reproduction of this article is prohibited.

TABLE 4
Double integrator: ratio $\inf \mathbf{Q}_5/T(x_0)$.

Fifth LMI-relaxation: $r = 5$										
0.7550	0.5539	0.3928	0.9995	0.9995	0.9995	0.9994	0.9992	0.9988	0.9985	0.9984
0.6799	0.4354	0.9828	0.9794	0.9896	0.9923	0.9917	0.9919	0.9923	0.9923	0.9938
0.6062	0.9805	0.9314	0.9462	0.9706	0.9836	0.9853	0.9847	0.9848	0.9862	0.9871
0.5368	0.8422	0.8550	0.8911	0.9394	0.9599	0.9684	0.9741	0.9727	0.9793	0.9776
0.4713	0.6417	0.7334	0.8186	0.8622	0.9154	0.9448	0.9501	0.9505	0.9665	0.9637
0.0000	0.4184	0.5962	0.7144	0.8053	0.8825	0.9044	0.9210	0.9320	0.9544	0.9534
0.4742	0.5068	0.6224	0.7239	0.7988	0.8726	0.8860	0.9097	0.9263	0.9475	0.9580
0.5410	0.6003	0.6988	0.7585	0.8236	0.8860	0.9128	0.9257	0.9358	0.9452	0.9528
0.6106	0.6826	0.7416	0.8125	0.8725	0.9241	0.9305	0.9375	0.9507	0.9567	0.9604
0.6864	0.7330	0.7979	0.8588	0.9183	0.9473	0.9481	0.9480	0.9559	0.9634	0.9733
0.7462	0.8032	0.8564	0.9138	0.9394	0.9610	0.9678	0.9678	0.9696	0.9755	0.9764

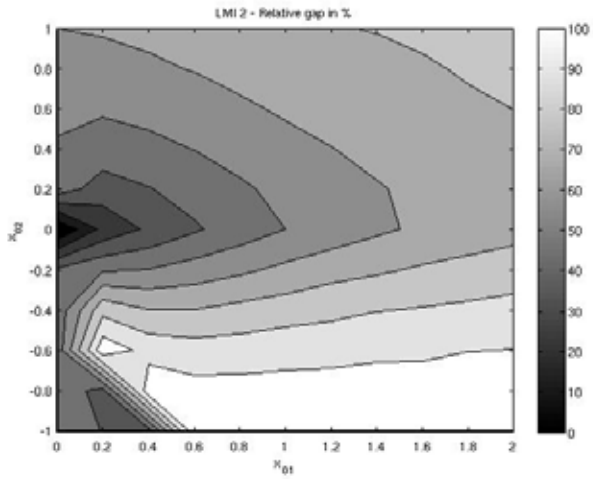

FIG. 1. *Double integrator: level sets* $\inf \mathbf{Q}_2/T(x_0)$.

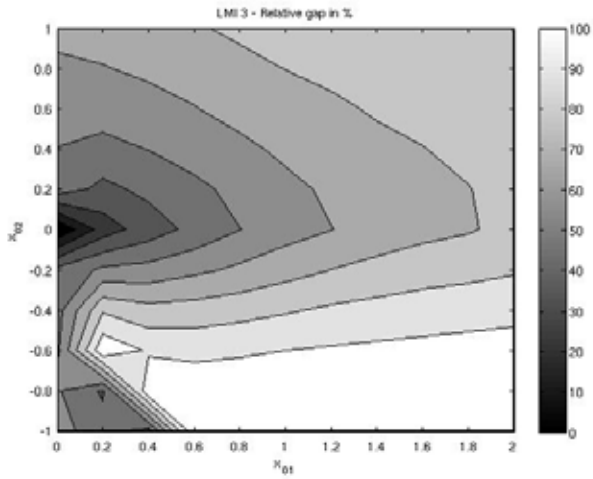

FIG. 2. *Double integrator: level sets* $\inf \mathbf{Q}_3/T(x_0)$.

Copyright © by SIAM. Unauthorized reproduction of this article is prohibited.

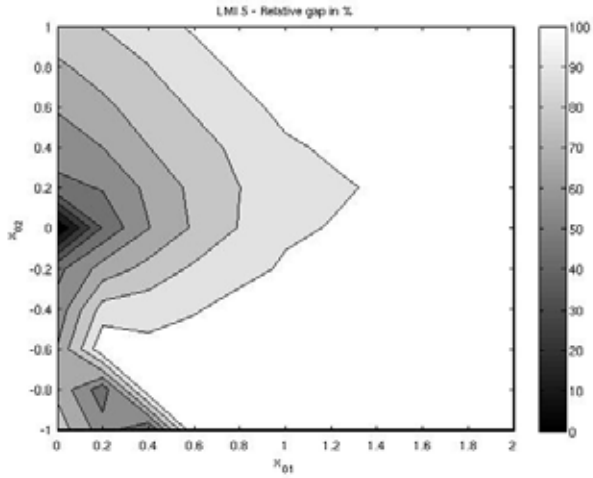

FIG. 3. *Double integrator: level sets* $\inf \mathbf{Q}_5/T(x_0)$.

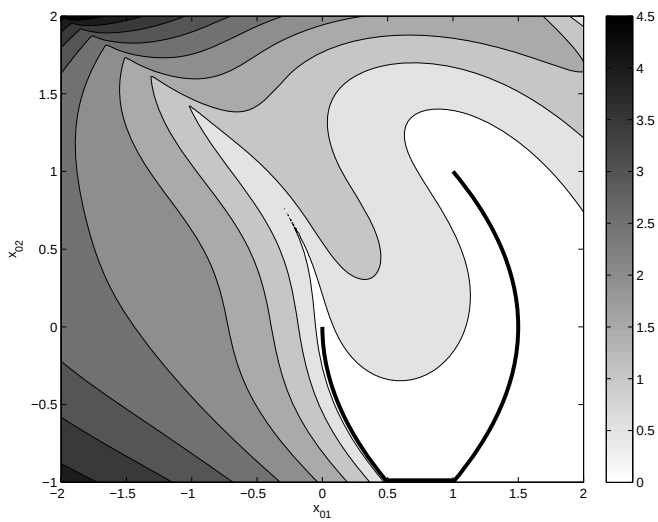

FIG. 4. *Double integrator: level sets* $\Lambda_5(x) - T(x)$ *and optimal trajectory starting from* $x_1(0) = x_2(0) = 1$.

5.2. The Brockett integrator. Consider the so-called *Brockett system* in $\mathbb{R}^3$ (see [7]),

$$\begin{aligned} \dot{x}_1(t) &= u_1(t), \\ \dot{x}_2(t) &= u_2(t), \\ \dot{x}_3(t) &= u_1(t)x_2(t) - u_2(t)x_1(t), \end{aligned} \tag{5.2}$$

where $x = (x_1, x_2, x_3)$, and the control $\mathbf{u} = (u_1(t), u_2(t)) \in \mathcal{U}$ satisfies the constraint

$$u_1(t)^2 + u_2(t)^2 \leq 1 \quad \forall t \geq 0. \tag{5.3}$$

Copyright © by SIAM. Unauthorized reproduction of this article is prohibited.

In this case, we have $\mathbf{X} = \mathbb{R}^3$, $\mathbf{K} = \{(0,0,0)\}$, and $\mathbf{U}$ is the closed unit ball of $\mathbb{R}^2$, centered at the origin.

Note that set $\mathbf{X}$ is not compact and so the convergence result of Theorem 3.6 may not hold; see the discussion at the beginning of Example 5.1. Nevertheless, in the numerical examples, we have not enforced additional state constraints.

5.2.1. Exact computation. Let $T(x)$ be the minimum time needed to steer an initial condition $x \in \mathbb{R}^3$ to the origin. We recall the following result of [2] (given in fact for an equivalent (reachability) OCP of steering the origin to a given point x).

PROPOSITION 5.1. *Consider the minimum time OCP for the system* (5.2) *with control constraint* (5.3). *The minimum time $T(x)$ needed to steer the origin to a point $x = (x_1, x_2, x_3) \in \mathbb{R}^3$ is given by*

$$T(x_1, x_2, x_3) = \frac{\theta\sqrt{x_1^2 + x_2^2 + 2|x_3|}}{\sqrt{\theta + \sin^2\theta - \sin\theta\cos\theta}}, \tag{5.4}$$

where $\theta = \theta(x_1, x_2, x_3)$ is the unique solution in $[0, \pi)$ of

$$\frac{\theta - \sin\theta\cos\theta}{\sin^2\theta}(x_1^2 + x_2^2) = 2|x_3|. \tag{5.5}$$

Moreover, the function T is continuous on $\mathbb{R}^3$ and is analytic outside the line $x_1 = x_2 = 0$.

Remark 5.2. Along the line $x_1 = x_2 = 0$, one has

$$T(0, 0, x_3) = \sqrt{2\pi|x_3|}.$$

The singular set of the function T, i.e., the set where T is not C^1, is the line $x_1 = x_2 = 0$ in $\mathbb{R}^3$. More precisely, the gradients $\partial T/\partial x_i$, $i = 1, 2$, are discontinuous at every point $(0, 0, x_3)$, $x_3 \neq 0$. For the interested reader, the level sets $\{(x_1, x_2, x_3) \in \mathbb{R}^3 \mid T(x_1, x_2, x_3) = r\}$, with $r > 0$, are displayed, e.g., in Prieur and Trélat [38].

5.2.2. Numerical approximation. Recall that the convergence result of Theorem 3.6 is guaranteed for $\mathbf{X}$ compact only. However, in the present case $\mathbf{X} = \mathbb{R}^3$ is not compact. One possibility is to take for $\mathbf{X}$ a large ball of $\mathbb{R}^3$ centered at the origin because for initial states x_0 with norm $\|x_0\|$ relatively small, the optimal trajectory remains in $\mathbf{X}$. However, in the numerical experiments presented below, we have chosen to maintain $\mathbf{X} = \mathbb{R}^3$, that is, the LMI-relaxation $\mathbf{Q}_r$ does not include any localizing constraint $M_{r-r(v_j)}(v_j\, z(x)) \succeq 0$ on the moment sequence $z(x)$.

Recall that $\inf \mathbf{Q}_r \uparrow \min \mathbf{P}$ as r increases, i.e., the more moments we consider, the closer to the exact value we get.

In Table 5 we have displayed the optimal values $\inf \mathbf{Q}_r$ for 16 different values of the initial state $x(0) = x_0$, in fact, all 16 combinations of $x_{01} = 0$, $x_{02} = 0, 1, 2, 3$, and $x_{03} = 0, 1, 2, 3$. So, the entry $(2, 3)$ of Table 5 for the second LMI-relaxation is $\inf \mathrm{Q}_2$ for the initial condition $x_0 = (0, 1, 2)$. At some (few) places in the table, the * indicates that the SDP solver encountered some numerical problems, which explains why one finds a lower bound $\inf \mathbf{Q}_{r-1}$ slightly higher than $\inf \mathbf{Q}_r$, when practically equal to the exact value T^*.

Notice that the upper triangular part (i.e., when both first coordinates x_{02}, x_{03} of the initial condition are away from zero) displays very good approximations with low order moments. In addition, the further the coordinates from zero, the better.

For another set of initial conditions $x_{01} = 1$ and $x_{0i} = \{1, 2, 3\}$ Table 6 displays the results obtained at the LMI-relaxation $\mathbf{Q}_4$.

Copyright © by SIAM. Unauthorized reproduction of this article is prohibited.

TABLE 5
Brockett integrator: LMI-relaxations: $\inf \mathrm{Q}_r$.

First LMI-relaxation: $r = 1$			
0.0000	0.9999	1.9999	2.9999
0.0140	1.0017	2.0010	3.0006
0.0243	1.0032	2.0017	3.0024
0.0295	1.0101	2.0034	3.0040
Second LMI-relaxation: $r = 2$			
0.0000	0.9998	1.9997*	2.9994*
0.2012	1.1199	2.0762	3.0453
0.3738	1.2003	2.1631	3.1304
0.4946	1.3467	2.2417	3.1943
Third LMI-relaxation: $r = 3$			
0.0000	0.9995	1.9987*	2.9984*
0.7665	1.3350	2.1563	3.0530
1.0826	1.7574	2.4172	3.2036
1.3804	2.0398	2.6797	3.4077
Fourth LMI-relaxation: $r = 4$			
0.0000	0.9992	1.9977	2.9952
1.2554	1.5925	2.1699	3.0478
1.9962	2.1871	2.5601	3.1977
2.7006	2.7390	2.9894	3.4254
Optimal time T^*			
0.0000	1.0000	2.0000	3.0000
2.5066	1.7841	2.1735	3.0547
3.5449	2.6831	2.5819	3.2088
4.3416	3.4328	3.0708	3.4392

TABLE 6
Brockett integrator: $\inf \mathbf{Q}_4$ *with* $x_{01} = 1$.

Fourth LMI-relaxation: $r = 4$		
1.7979	2.3614	3.2004
2.3691	2.6780	3.3341
2.8875	3.0654	3.5337
Optimal time T^*		
1.8257	2.3636	3.2091
2.5231	2.6856	3.3426
3.1895	3.1008	3.5456

The regularity property of the minimal time function seems to be an important topic of further investigation.

5.3. Certificate of uncontrollabilty in finite time. Consider the so-called Zermelo problem in $\mathbb{R}^2$ studied by Bokanowski et al. [5]:

$$\begin{aligned} \dot{x}_1(t) &= 1 - a\, x_2(t) + v\, \cos\theta, \\ \dot{x}_2(t) &= v\, \sin\theta, \end{aligned} \tag{5.6}$$

with $a = 0.1$. The state x is constrained to remain in the set $\mathbf{X} := [-6, 2] \times [-2, 2] \subset \mathbb{R}^2$, and we also have the control constraints $0 \le v \le 0.44$, as well as $\theta \in [0, 2\pi]$. The target $\mathbf{K}$ to reach from an initial state x_0 is the ball $B(0, \rho)$, with $\rho := 0.44$.

With the change of variable $u_1 = v\cos\theta$, $u_2 = v\sin\theta$, and $\mathbf{U} := \{u : u_1^2 + u_2^2 \le \rho^2\}$, this problem is formulated as a minimum time OCP with associated hierarchy of LMI-

Copyright © by SIAM. Unauthorized reproduction of this article is prohibited.

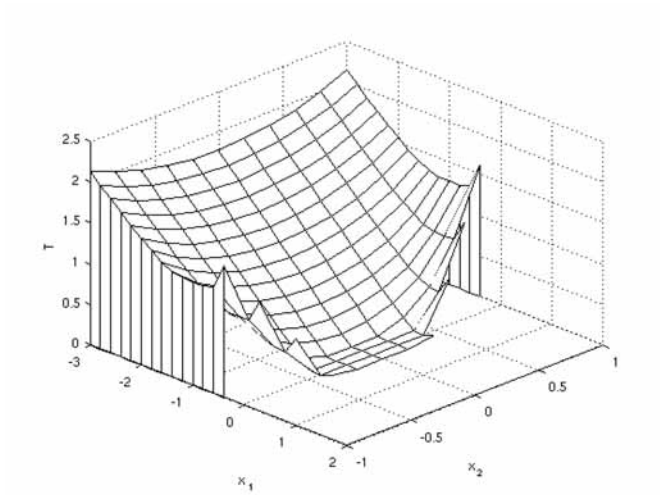

FIG. 5. *Zermelo problem: uncontrollable states with* $\mathbf{Q}_1$.

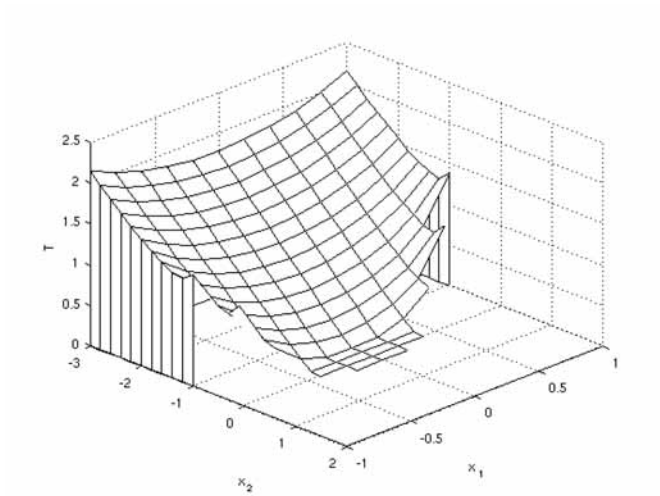

FIG. 6. *Zermelo problem: uncontrollable states with* $\mathbf{Q}_2$.

relaxations ($\mathbf{Q}_r$) defined in (3.13). Therefore, if an LMI-relaxation $\mathbf{Q}_r$ at some stage r of the hierarchy is infeasible, then the OCP itself is infeasible; i.e., the initial state x_0 cannot be steered to the target $\mathbf{K}$ while the trajectory remains in $\mathbf{X}$.

Figures 5 and 6 display the uncontrollable initial states $x_0 \in \mathbf{X}$ found with the infeasibility of the LMI-relaxations $\mathbf{Q}_1$ and $\mathbf{Q}_2$, respectively. With $\mathbf{Q}_1$, i.e., by using only second moments, we already have a very good approximation of the controllable set displayed in [5], and $\mathbf{Q}_2$ brings only a small additional set of uncontrollable states.

Appendix.

A.1. Proof of Theorem 2.3. We first prove item (i). Consider the LP $\mathbf{P}$ defined in (2.13), and assumed to be feasible. From the constraint $\mathcal{L}^*(\mu,\nu) = \delta_{(0,x_0)}$,

Copyright © by SIAM. Unauthorized reproduction of this article is prohibited.

one has

$$\int_{\mathbf{K}} g(T,x)d\nu - \int_{\mathbf{S}} \left(\frac{\partial g}{\partial t}(t,x) + \left\langle \frac{\partial g}{\partial x}(t,x), f(t,x,u) \right\rangle \right) d\mu = g(0,x_0) \quad \forall g \in C_1(\mathbf{\Sigma}).$$

In particular, taking $g(t,x) = 1$ and $g(t,x) = T - t$, it follows that $\mu(\mathbf{S}) = T$ and $\nu(\mathbf{K}) = 1$. Hence, for every (μ,ν) satisfying $\mathcal{L}^*(\mu,\nu) = \delta_{(0,x_0)}$, the pair $(\frac{1}{T}\mu,\nu)$ belongs to the unit ball B_1 of $(\mathcal{M}(\mathbf{S}) \times \mathcal{M}(\mathbf{K}))$. From the Banach–Alaoglu theorem, B_1 is compact for the weak* topology, and even sequentially compact because B_1 is metrizable (see, e.g., Hernández-Lerma and Lasserre [25, Lemma 1.3.2]). Since $\mathcal{L}^*$ is continuous (see Remark 2.1), it follows that the set of (μ,ν) satisfying $\mathcal{L}^*(\mu,\nu) = \delta_{(0,x_0)}$ is a closed subset of $B_1 \cap (\mathcal{M}(\mathbf{S})_+ \times \mathcal{M}(\mathbf{K})_+)$, and thus is compact. Moreover, since the LP $\mathbf{P}$ is feasible, this set is nonempty. Finally, since the linear functional to be minimized is continuous, $\mathbf{P}$ is solvable.

We next prove item (ii). Consider the set

$$D := \{(\mathcal{L}^*(\mu,\nu), \langle (h,H),(\mu,\nu)\rangle) \ \mid \ (\mu,\nu) \in \mathcal{M}(\mathbf{S})_+ \times \mathcal{M}(\mathbf{K})_+\}.$$

To prove that D is closed, consider a sequence $\{(\mu_n,\nu_n)\}_{n\in\mathbb{N}}$ of $\mathcal{M}(\mathbf{S})_+ \times \mathcal{M}(\mathbf{K})_+$ such that

$$(\mathcal{L}^*(\mu_\alpha,\nu_\alpha), \langle (h,H),(\mu_\alpha,\nu_\alpha)\rangle) \to (a,b) \tag{A.1}$$

for some $(a,b) \in C_1(\mathbf{\Sigma})^* \times \mathbb{R}$. This means that $\mathcal{L}^*(\mu_n,\nu_n) \to a$ and $\langle (h,H),(\mu_n,\nu_n)\rangle \to b$. In particular, taking $\varphi_0 := T - t$ and $\varphi_1 = 1$, there must hold

$$\mu_n(\mathbf{S}) = \langle \varphi_0, \mathcal{L}^*(\mu_n,\nu_n)\rangle \to \langle \varphi_0, a\rangle, \quad \nu_n(\mathbf{K}) = \langle \varphi_1, \mathcal{L}^*(\mu_n,\nu_n)\rangle \to \langle \varphi_1, a\rangle.$$

Hence, there exist $n_0 \in \mathbb{N}$ and a ball B_r of $\mathcal{M}(\mathbf{S}) \times \mathcal{M}(\mathbf{K})$, such that $(\mu_n,\nu_n) \in B_r$ for every $n \geq n_0$. Since B_r is compact, along a subsequence, (μ_n,ν_n) converges weakly to some $(\mu,\nu) \in \mathcal{M}(\mathbf{S})_+ \times \mathcal{M}(\mathbf{K})_+$. This fact, combined with (A.1) and the continuity of $\mathcal{L}^*$, yields $a = \mathcal{L}^*(\mu,\nu)$ and $b = \langle (h,H),(\mu,\nu)\rangle$. Therefore, the set D is closed.

From Anderson and Nash [1, Theorems 3.10 and 3.22], it follows that there is no duality gap between $\mathbf{P}$ and $\mathbf{P}^*$, and hence, with (i), $\sup \mathbf{P}^* = \min \mathbf{P}$.

Item (iii) follows from Vinter [45, Theorems 2.1 and 2.3] applied to the mappings

$$F(t,x) := f(t,x,U)\,, \quad l(t,x,v) := \inf_{u\in U} \{\, h(t,x,u) \mid v = f(t,x,u) \,\}$$

for $(t,x) \in \mathbb{R} \times \mathbb{R}^n$. $\square$

A.2. Proof of Theorem 3.6. First of all, observe that $\mathbf{Q}_r$ has a feasible solution. Indeed, it suffices to consider the sequences y and z consisting of the moments (up to order $2r$) of the o.m.'s $\nu^{\mathbf{u}}$ and $\mu^{\mathbf{u}}$ associated with an admissible control $\mathbf{u} \in \mathcal{U}$ of the OCP (2.1)–(2.5).

Next, observe that for every couple (y,z) satisfying all constraints of $\mathbf{Q}_r$, there must holds $y_0 = 1$ and $z_0 = 1$. Indeed, it suffices to choose $g(t,x) = 1$ and $g(t,x) = 1 - t$ (or t) in the constraint

$$L_y(g_1) - L_z(\partial g/\partial t + \langle \nabla_x g, f\rangle) = g(0,x_0).$$

We next prove that for r sufficiently large, one has $|z(x)_\alpha| \leq 1$, $|z(u)_\beta| \leq 1$ $|z(t)_k| \leq 1$ for every k, and $|y_\alpha| \leq 1$. We provide details only of the proof for $z(x)$, the arguments being similar for $z(u)$, $z(t)$, and y.

Copyright © by SIAM. Unauthorized reproduction of this article is prohibited.

Let $\Sigma^2 \subset \mathbb{R}[x]$ be the space of sum of squares polynomials, and let $Q \subset \mathbb{R}[x]$ be the *quadratic modulus* generated by the polynomials $v_j \in \mathbb{R}[x]$ that define $\mathbf{X}$, i.e.,

$$Q := \left\{ \sigma \in \mathbb{R}[x] \quad \middle| \quad \sigma = \sigma_0 + \sum_{j \in J} \sigma_j \, v_j \quad \text{with } \sigma_j \in \Sigma^2 \quad \forall\, j \in \{0\} \cup J \right\}.$$

In addition, let $Q(t) \subset Q$ be the set of elements σ of Q which have a representation $\sigma_0 + \sum_{j \in J} \sigma_j \, v_j$ for some sum of squares family $\{\sigma_j\} \subset \Sigma^2$ with $\deg \sigma_0 \leq 2t$ and $\deg \sigma_j v_j \leq 2t$ for every $j \in J$.

Let $r \in \mathbb{N}$ be fixed. Since $\mathbf{X} \subset [-1,1]^n$, there holds $1 \pm x^\alpha > 0$ on $\mathbf{X}$ for every $\alpha \in \mathbb{N}^n$ with $|\alpha| \leq 2r$. Therefore, since $\mathbf{X}$ satisfies Putinar's condition (see Definition 3.4), the polynomial $x \mapsto 1 \pm x^\alpha$ belongs to Q (see Putinar [39]). Moreover, there exists $l(r)$ such that $x \mapsto 1 \pm x^\alpha \in Q(l(r))$ for every $|\alpha| \leq 2r$. Of course, $x \mapsto 1 \pm x^\alpha \in Q(l)$ for every $|\alpha| \leq 2r$ whenever $l \geq l(r)$.

For every feasible solution z of $\mathbf{Q}_{l(r)}$ one has

$$|z(x)_\alpha| = |\, L_z(x^\alpha)\, | \leq z_0 = 1, \qquad |\alpha| \leq 2r.$$

This follows from $z_0 = 1$, $M_{l(r)}(z) \succeq 0$, and $M_{l(r)-r(v_j)}(v_j \, z(x)) \succeq 0$ which implies

$$z_0 \pm z(x)_\alpha = L_z(1 \pm x^\alpha) = L_z(\sigma_0) + \sum_{j=1}^m L_{z(x)}(\sigma_j \, v_j) \geq 0.$$

With similar arguments, one redefines $l(r)$ so that, for every couple (y,z) satisfying the constraints of $\mathbf{Q}_{l(r)}$, one has

$$0 \leq z_k(t) \leq 1 \quad \text{and} \quad |z(x)_\alpha|,\, |z(u)_\beta|,\, |y_\alpha| \,\leq\, 1 \qquad \forall\, k,\, |\alpha|,\, |\beta| \leq 2r.$$

From this, and with $l(r) := 2l(r)$, we immediately deduce that $|z_\gamma| \leq 1$ whenever $|\gamma| \leq 2r$. In particular, $L_y(H) + L_z(h) \,\geq\, -\sum_\beta |H_\beta| - \sum_\gamma |h_\gamma|$, which proves that $\inf \mathbf{Q}_{l(r)} > -\infty$, and so $\inf \mathbf{Q}_r > -\infty$ for r sufficiently large.

Let $\rho := \inf \mathbf{P} = \min \mathbf{P}$ (by Theorem 2.3), let $r \geq l(r_0)$, and let (z^r, y^r) be a nearly optimal solution of $\mathbf{Q}_r$ with value

$$\inf \mathbf{Q}_r \leq L_{z^r}(h) + L_{y^r}(H) \leq \inf \mathbf{Q}_r + \frac{1}{r} \quad \left(\leq \rho + \frac{1}{r} \right). \tag{A.2}$$

Complete the finite vectors y^r and z^r with zeros to make them infinite sequences. Since for arbitrary $s \in \mathbb{N}$ one has $|y^r_\alpha|, |z^r_\gamma| \leq 1$ whenever $|\alpha|, |\gamma| \leq 2s$, provided r is sufficiently large, by a standard diagonal argument, there exists a subsequence $\{r_k\}$ and two infinite sequences y and z, with $|y_\alpha| \leq 1$ and $|z_\gamma| \leq 1$ for all α, γ, and such that

$$\lim_{k \to \infty} y^{r_k}_\alpha = y_\alpha \quad \forall \alpha \in \mathbb{N}^n, \quad \lim_{k \to \infty} z^{r_k}_\gamma = z_\gamma \quad \forall \gamma \in \mathbb{N} \times \mathbb{N}^n \times \mathbb{N}^m. \tag{A.3}$$

Next, let r be fixed arbitrarily. Observe that $M_{r_k}(y^{r_k}) \succeq 0$ implies $M_r(y^{r_k}) \succeq 0$ whenever $r_k \geq r$, and similarly $M_r(z^{r_k}) \succeq 0$. Therefore, from (A.3) and $M_r(y^{r_k}) \succeq 0$, we deduce that $M_r(y) \succeq 0$, and similarly $M_r(z) \succeq 0$. Since this holds for arbitrary r, and $|y_\alpha|, |z_\gamma| \leq 1$ for all α, γ, one infers from Proposition 3.2 that y and z are moment sequences of two measures ν and μ with support contained in $[-1,1]^n$ and $[0,1] \times [-1,1]^n \times [-1,1]^m$, respectively. In addition, from the equalities $y^{r_k}_0 = 1$ and

Copyright © by SIAM. Unauthorized reproduction of this article is prohibited.

$z_0^{r_k} = 1$ for every k, it follows that ν and μ are probability measures on $[-1,1]^n$ and $[0,1] \times [-1,1]^n \times [-1,1]^m$.

Next, let $(t,\alpha) \in \mathbb{N} \times \mathbb{N}^n$ be fixed arbitrarily. From

$$L_{y^{r_k}}(g_1) - g(0,x_0) - L_{z^{r_k}}(\partial g/\partial t + \langle \nabla_x g, f\rangle) = 0, \quad \text{with } g = (t^p x^\alpha),$$

and the convergence (A.3), we obtain

$$L_y(g_1) - g(0,x_0) - L_z(\partial g/\partial t + \langle \nabla_x g, f\rangle) = 0, \quad \text{with } g = (t^p x^\alpha),$$

that is, $\langle \mathcal{L} g, (\mu,\nu)\rangle = \langle g, \delta_{(0,x_0)}\rangle$. Since $(t,\alpha) \in \mathbb{N} \times \mathbb{N}^n$ is arbitrary, we have

$$\langle g, \mathcal{L}^*(\mu,\nu)\rangle = \langle \mathcal{L}\, g, (\mu,\nu)\rangle = \langle g, \delta_{(0,x_0)}\rangle \quad \forall\, g \in \mathbb{R}[t,x],$$

which implies that $\mathcal{L}^*(\mu,\nu) = \delta_{(0,x_0)}$.

Let $z(x)$, $z(u)$, and $z(t)$ denote the moment vectors of the marginals of μ with respect to the variables $x \in \mathbb{R}^n$, $u \in \mathbb{R}^m$, and $t \in \mathbb{R}$, respectively, i.e.,

$$z(x)^\alpha = \int x^\alpha\, \mu(d(t,x,u)) \quad \forall \alpha \in \mathbb{N}^n, \quad z(u)^\beta = \int u^\beta\, \mu(d(t,x,u)) \quad \forall \beta \in \mathbb{N}^m,$$

and $z(t)^k = \int t^k\, \mu(d(t,x,u))$ for every $k \in \mathbb{N}$.

With r fixed arbitrarily, and using again (A.3), we also have $M_r(\theta_j y) \succeq 0$ for every $j \in J_T$, and

$$M_r(v_j\, z(x)) \succeq 0 \quad \forall j \in J, \quad M_r(w_k\, z(u)) \succeq 0 \quad \forall k \in W, \quad M_r(t(1-t)\, z(t)) \succeq 0.$$

Since $\mathbf{X}$, $\mathbf{K}$, and $\mathbf{U}$ satisfy Putinar's condition (see Definition 3.4), from Theorem 3.5 (Putinar's Positivstellensatz), y is the moment sequence of a probability measure ν supported on $\mathbf{K} \subset [-1,1]^n$. Similarly, $z(x)$ is the moment sequence of a measure μ^x supported on $\mathbf{X} \subset [-1,1]^n$, $z(u)$ is the moment sequence of a measure μ^u supported on $\mathbf{U} \subset [-1,1]^m$, and $z(t)$ is the moment sequence of a measure μ^t supported on $[0,1]$. Since measures on compact sets are moment determinate, it follows that μ^x, μ^u, and μ^t are the marginals of μ with respect to x, u, and t, respectively. Therefore, μ has its support contained in $\mathbf{S}$, and from $\mathcal{L}^*(\mu,\nu) = \delta_{(0,x_0)}$ it follows that (μ,ν) satisfies all constraints of the problem $\mathbf{P}$.

Moreover, one has

$$\begin{aligned}
\lim_{k\to\infty} \inf \mathbf{Q}_{r_k} &= \lim_{k\to\infty} L_{z^{r_k}}(h) + L_{y^{r_k}}(H) \qquad \text{(by (A.2))}\\
&= L_z(h) + L_y(H) \qquad \text{(by (A.3))}\\
&= \int h\, d\mu + \int H\, d\nu \le \rho = \min \mathbf{P}.
\end{aligned}$$

Hence, (μ,ν) is an optimal solution of $\mathbf{P}$, and $\min \mathbf{Q}_r \uparrow \min \mathbf{P}$ (the sequence is monotone nondecreasing). Item (i) is proved.

Item (ii) follows from Theorem 2.3(iii). $\square$

A.3. Proof of Theorem 4.1. It suffices to prove that $v_p \to v$ as $p \to +\infty$. For every integer p, $v_p = \min \mathbf{P}_p$ is attained for a couple of measures (μ_p,ν_p). As in the proof of Theorem 2.3, the sequence $\{(\mu_p,\nu_p)\}_{p\in\mathbb{N}}$ is bounded in $\mathcal{M}(\mathbf{S})_+ \times \mathcal{M}(\mathbf{K})_+$, and hence, along a subsequence, it converges to an element (μ,ν) of this space for the weak* topology.

Copyright © by SIAM. Unauthorized reproduction of this article is prohibited.

On the one hand, by definition, $\mathcal{L}_p^*(\mu_p, \nu_p) = \delta_{(0,x_0)}$ for every p. On the other, $\mathcal{L}_p^*$ tends strongly to $\mathcal{L}^*$, and so $\mathcal{L}^*(\mu, \nu) = \delta_{(0,x_0)}$. Moreover, since (h_p, H_p) tends strongly to (h, H) in $C_1(\mathbf{S}) \times C_1(\mathbf{K})$, one has

$$v_p = \langle (\mu_p, \nu_p), (h_p, H_p) \rangle \longrightarrow \langle (\mu, \nu), (h, H) \rangle,$$

and so $v \leq \langle (\mu, \nu), (h, H) \rangle$. We next prove that $v = \langle (\mu, \nu), (h, H) \rangle$.

Since (μ_p, ν_p) is an optimal solution of $\mathbf{P}_p$,

$$\langle (\mu_p, \nu_p), (h_p, H_p) \rangle \leq \langle (\bar{\mu}, \bar{\nu}) \rangle, (h_p, H_p) \quad \forall (\bar{\mu}, \bar{\nu}) \mid \mathcal{L}_p^*(\bar{\mu}, \bar{\nu}) = \delta_{(0,x_0)}.$$

Hence, passing to the limit,

$$\langle (\mu, \nu), (h, H) \rangle \leq \langle (\bar{\mu}, \bar{\nu}) \rangle, (h, H) \quad \forall (\bar{\mu}, \bar{\nu}) \mid \mathcal{L}^*(\bar{\mu}, \bar{\nu}) = \delta_{(0,x_0)},$$

and so (μ, ν) is an optimal solution of $\mathbf{P}$, i.e., $v = \langle (\mu, \nu), (h, H) \rangle$. $\square$

Acknowledgment. This work benefited from comments by Carlo Savorgnan.

REFERENCES

[1] E. J. Anderson and P. Nash, *Linear Programming in Infinite-Dimensional Spaces*, John Wiley, Chichester, UK, 1987.

[2] R. Beals, B. Gaveau, and P. C. Greiner, *Hamilton-Jacobi theory and the heat kernel on Heisenberg groups*, J. Math. Pures Appl., 79 (2000), pp. 633–689.

[3] C. Berg, *The multidimensional moment problem and semigroups*, Proc. Symp. Appl. Math., 37 (1987), pp. 110–124.

[4] A. G. Bhatt and V. S. Borkar, *Occupation measures for controlled Markov processes: Characterization and optimality*, Ann. Probab., 24 (1996), pp. 1531–1562.

[5] O. Bokanowski, S. Martin, R. Munos, and H. Zidani, *An anti-diffusive scheme for viability problems*, Appl. Numer. Math., 56 (2006), pp. 1147–1162.

[6] V. Borkar, *Convex analytic methods in Markov decision processes*, in Handbook of Markov Decision Processes, E. A. Feinberg and A. Shwartz, eds., Kluwer Academic, Boston, MA, 2002, pp. 377–408.

[7] R. W. Brockett, *Asymptotic stability and feedback stabilization*, in Differential Geometric Control Theory, R. W. Brockett, R. S. Millman, and H. J. Sussmann, eds., Birkhäuser, Boston, MA, 1983, pp. 181–191.

[8] I. Capuzzo-Dolcetta and P. L. Lions, *Hamilton-Jacobi equations with state constraints*, Trans. Amer. Math. Soc., 318 (1990), pp. 643–683.

[9] M. J. Cho and R. H. Stockbridge, *Linear programming formulation for optimal stopping problems*, SIAM J. Control Optim., 40 (2002), pp. 1965–1982.

[10] C. Coatmélec, *Approximation et interpolation des fonctions différentiables de plusieurs variables*, Ann. Sci. École Norm. Sup. (3), 83 (1966), pp. 271–341.

[11] D. A. Dawson, *Qualitative behavior of geostochastic systems*, Stochastic Process. Appl., 10 (1980), pp. 1–31.

[12] W. H. Fleming and D. Vermes, *Convex duality approach to the optimal control of diffusions*, SIAM J. Control Optim., 27 (1989), pp. 1136–1155.

[13] R. Fletcher, *Practical Methods of Optimization. Vol.* 1. *Unconstrained Optimization*, John Wiley, Chichester, UK, 1980.

[14] V. Gaitsgory and S. Rossomakhine, *Linear programming approach to deterministic long run average problems of optimal control*, SIAM J. Control Optim., 44 (2006), pp. 2006–2037.

[15] P. E. Gill, W. Murray, and M. H. Wright, *Practical Optimization*, Academic Press, London, New York, 1981.

[16] R. F. Hartl, S. P. Sethi, and R. G. Vickson, *A survey of the maximum principles for optimal control problems with state constraints*, SIAM Rev., 37 (1995), pp. 181–218.

[17] K. Helmes, S. Röhl, and R. H. Stockbridge, *Computing moments of the exit time distribution for Markov processes by linear programming*, Oper. Res., 49 (2001), pp. 516–530.

[18] K. Helmes and R. H. Stockbridge, *Numerical comparison of controls and verification of optimality for stochastic control problems*, J. Optim. Theory Appl., 106 (2000), pp. 107–127.

Copyright © by SIAM. Unauthorized reproduction of this article is prohibited.

[19] D. Henrion and J. B. Lasserre, *Solving nonconvex optimization problems*, IEEE Control Systems Mag., 24 (2004), pp. 72–83.
[20] D. Hernandez-Hernandez, O. Hernández-Lerma, and M. Taksar, *The linear programming approach to deterministic optimal control problems*, Appl. Math., 24 (1996), pp. 17–33.
[21] O. Hernández-Lerma and J. B. Lasserre, *Discrete-Time Markov Control Processes: Basic Optimality Criteria*, Springer-Verlag, New York, 1996.
[22] O. Hernández-Lerma and J. B. Lasserre, *Approximation schemes for infinite linear programs*, SIAM J. Optim., 8 (1998), pp. 973–988.
[23] O. Hernández-Lerma and J. B. Lasserre, *Further Topics in Discrete-Time Markov Control Processes*, Springer-Verlag, New York, 1999.
[24] O. Hernández-Lerma and J. B. Lasserre, *The linear programming approach*, in Handbook of Markov Decision Processes, E. A. Feinberg and A. Shwartz, eds., Kluwer Academic, Boston, MA, 2002, pp. 377–408.
[25] O. Hernández-Lerma and J. B. Lasserre, *Markov Chains and Invariant Probabilities*, Birkhäuser Verlag, Basel, 2003.
[26] M. W. Hirsch, *Differential Topology*, Grad. Texts in Math. 33, Springer-Verlag, New York, 1976.
[27] D. Jacobson, M. Lele, and J. L. Speyer, *New necessary conditions of optimality for control problems with state-variable inequality constraints*, J. Math. Anal. Appl., 35 (1971), pp. 255–284.
[28] J. L. Krivine, *Anneaux préordonnés*, J. Anal. Math., 12 (1964), pp. 307–326.
[29] T. G. Kurtz and R. H. Stockbridge, *Existence of Markov controls and characterization of optimal Markov controls*, SIAM J. Control Optim., 36 (1998), pp. 609–653.
[30] J. B. Lasserre, *Global optimization with polynomials and the problem of moments*, SIAM J. Optim., 11 (2001), pp. 796–817.
[31] J. B. Lasserre and T. Priéto-Rumeau, *SDP vs. LP relaxations for the moment approach in some performance evaluation problems*, Stoch. Models, 20 (2004), pp. 439–456.
[32] J. B. Lasserre, T. Priéto-Rumeau, and M. Zervos, *Pricing a class of exotic options via moments and SDP relaxations*, Math. Finance, 16 (2006), pp. 469–494.
[33] J. B. Lasserre, C. Prieur, and D. Henrion, *Nonlinear optimal control: Numerical approximations via moments and LMI relaxations*, in Proceedings of the 44th IEEE Conference on Decision and Control, Sevilla, Spain, 2005, pp. 1648–1653.
[34] H. Maurer, *On optimal control problems with bounded state variables and control appearing linearly*, SIAM J. Control Optim., 15 (1977), pp. 345–362.
[35] J. Nash, *The imbedding problem for Riemannian manifolds*, Ann. of Math. (2), 63 (1956), pp. 20–63.
[36] H. J. Pesch, *A practical guide to the solution of real-life optimal control problems*, Control Cybernet., 23 (1994), pp. 7–60.
[37] L. S. Pontryagin, V. G. Boltyanskij, R. V. Gamkrelidze, and E. F. Mishchenko, *The Mathematical Theory of Optimal Processes*, John Wiley, New York, 1962.
[38] C. Prieur and E. Trélat, *Robust optimal stabilization of the Brockett integrator via a hybrid feedback*, Math. Control Signals Systems, 17 (2005), pp. 201–216.
[39] M. Putinar, *Positive polynomials on compact semi-algebraic sets*, Indiana Univ. Math. J., 42 (1993), pp. 969–984.
[40] K. Schmüdgen, *The K-moment problem for compact semi-algebraic sets*, Math. Ann., 289 (1991), pp. 203–206.
[41] H. M. Soner, *Optimal control with state-space constraints* I, SIAM J. Control Optim., 24 (1986), pp. 552–561.
[42] J. Stoer and R. Bulirsch, *Introduction to Numerical Analysis*, 3rd ed., Springer-Verlag, New York, 2002.
[43] E. Trélat, *Contrôle optimal: Théorie et applications*, Vuibert, Paris, 2005.
[44] F.-H. Vasilescu, *Spectral measures and moment problems*, in Spectral Analysis and Its Applications, Theta Ser. Adv. Math. 2, Theta, Bucharest, 2003, pp. 173–215.
[45] R. Vinter, *Convex duality and nonlinear optimal control*, SIAM J. Control Optim., 31 (1993), pp. 518–538.
[46] O. von Stryk and R. Bulirsch, *Direct and indirect methods for trajectory optimization*, Ann. Oper. Res., 37 (1992), pp. 357–373.

Copyright © by SIAM. Unauthorized reproduction of this article is prohibited.